Federal Ministry for the
Environment, Nature Conservation
and Nuclear Safety

EU Stresstest
National Report of Germany

Implementation of the EU Stress Tests in Germany

Implementation of the EU Stress Tests in Germany

The European Council concluded in March 2011 that the safety of all EU nuclear plants should be reviewed on the basis of a comprehensive and transparent risk assessment ("stress test").

In addition to the European initiative, all countries with operating nuclear power plants indicated the performance of immediate safety reviews to take into account any lessons already learned or to be learned from the Fukushima Dai-ichi accident of 11th March 2011. The German Bundestag (Federal Parliament) called upon the German Federal Government on 17th March 2011 to conduct a comprehensive review of the safety requirements for the German nuclear power plants. The competent Federal Ministry asked its advisory body, the RSK, to perform this review. The findings of the RSK safety review were presented to the public on 17th May 2011.

For the European stress tests, ENSREG published the scope and modalities for comprehensive risk and safety assessments of EU nuclear power plants on 13th May 2011. This "Declaration of ENSREG" determines the concept, methodology and time schedule of the EU stress test. Detailed requirements on content and structure of the reports and the planned peer reviews in 2012 were developed under the leadership of ENREG and agreed at its meeting on 11th October 2011.

The BMU as the federal regulator in Germany asked the *Länder* nuclear regulatory authorities to initiate the EU stress tests according to the ENSREG Declaration. A joint meeting of BMU, *Länder* authorities, expert organisations and the licensees of the German nuclear power plants took place on 30th June 2011 to agree on the scope and the procedure of stress tests in Germany. It was also decided to take the 30th June 2011 as the reference date for the plants in operation, regardless future decisions on the possible limitation of the operating time by amendment to the Atomic Energy Act which were in the legislative procedure at that time. The "stress tests" were started by all German licensees with the self-commitment to deliver the progress report by 15th August 2011 and the final report by 31st October 2011 as required by ENSREG.

The structure of the German national report follows decisions of ENSREG. An additional Chapter 0 was included to illustrate the Federal situation in Germany and the involvement of all stakeholders in the process of the stress tests under this situation. In addition insights from the broader scope and specific methodology of the RSK safety review are included also in chapter 0. In chapter 4 other initiating events conceivable at the plant site are considered and in particular insights from the RSK safety review related to initiating events caused by man-made hazards, such as an aircraft crash, terrorist attack or cyber attacks.

Content

0 Legal framework and regulatory system and practices 4

0.1 Regulatory body in Germany 4

0.2 Political and regulatory decisions and legislation 6

0.3 Strategic response of German nuclear safety regulators to new safety significant insights or accidents – Post Fukushima safety Reviews 8

0.4 RSK safety review and follow up actions 9

0.4.1 Scope and method of the RSK safety review 9

0.4.2 On-going RSK work programme 11

0.5 Follow up activities of the Länder Authorities 12

0.6 EU Stress test in Germany 13

0.6.1 Initiation and Performance in Germany 14

0.6.2 Reports of the German licensees 15

0.6.3 Reviews and certificates of the Länder authorities 16

0.6.4 Reviews and assessments by the BMU 17

0.6.5 The final national report 17

1 General data about the sites and nuclear power plants 19

1.1 Brief description of the sites characteristics 19

1.1.1 Main characteristics of the units 20

1.1.2 Description of the systems for conduction of main safety functions 22

1.2 Overview of main safety significant differences of units 72

1.3 Use of PSA as part of the safety assessment 72

2 Earthquake 77

2.1 Design basis 78

2.1.1 Earthquake against which the plants are designed 78

2.1.2 Provisions to protect the plants against the design basis earthquake 83

2.1.3 Compliance of the plants with its current licensing basis 90

2.2 Evaluation of safety margins 92

2.2.1 Range of earthquake leading to severe fuel damage 92

2.2.2 Range of earthquake leading to loss of containment integrity 95
2.2.3 Earthquake exceeding the design basis earthquake for the plants and consequent flooding exceeding design basis flood 97
2.2.4 Measures which can be envisaged to increase robustness of the plants against earthquakes 97
2.3 Assessment and conclusions of the German regulatory body 98
2.3.1 Status of the documents presented by the licensees 98
2.3.2 Assessment of the regulator 98
2.3.3 Conclusions 98

3 Flooding 100
3.1 Design basis 101
3.1.1 Flooding against which the plants are designed 101
3.1.2 Provisions to protect the plants against the design basis flood 104
3.1.3 Plants compliance with its current licensing basis 109
3.2 Evaluation of safety margins 110
3.2.1 Estimation of safety margin against flooding 110
3.2.2 Measures which can be envisaged to increase robustness of the plants against flooding 113
3.3 Assessment and conclusions of the German regulatory body 113
3.3.1 Status of the documents presented by the licensees 113
3.3.2 Assessment of the regulator 114
3.3.3 Conclusions 114

4 Extreme weather conditions and other initiating events conceivable at the plant site 116
4.1 Design basis 116
4.1.1 Reassessment of weather conditions used as design basis 122
4.2 Evaluation of safety margins 122
4.2.1 Estimation of safety margin against extreme weather conditions 122
4.2.2 Measures which can be envisaged to increase robustness of the plants against extreme weather conditions 123
4.3 Assessment and conclusions of the German regulatory body 123

4.3.1 Status of the documents presented by the licensees 123
4.3.2 Assessment of the regulator 123
4.3.3 Conclusions 124
4.4 Consequences of loss of safety functions from any initiating event conceivable at the plant site 124
4.4.1 Aircraft crash 126
4.4.2 Gas release including blast waves and Toxic gases 128
4.4.3 Terrorist attacks including attacks on computer-based controls and systems 129
4.4.4 Effects of an accident in one power plant unit on the neighbouring unit . 130

5 Loss of electrical power and loss of ultimate heat sink 132
5.1 Loss of electrical power 132
5.1.1 Loss of off-site power 140
5.1.2 Loss of off-site power and loss of the ordinary back-up AC power source 146
5.1.3 Loss of off-site power and loss of the ordinary back-up AC power sources, and loss of permanently installed diverse back-up AC power sources 153
5.1.4 Conclusion on the adequacy of protection against loss of electrical power 159
5.1.5 Measures which can be envisaged to increase robustness of the plants in case of loss of electrical power 160
5.1.6 Assessment and conclusions of the regulator 160
5.2 Loss of the ultimate heat sink 163
5.2.1 Design provisions to prevent the loss of the primary ultimate heat sink, such as alternative inlets for sea water or systems to protect main water inlet from blocking 163
5.2.2 Loss of the primary ultimate heat sink (e.g., loss of access to cooling water from the river, lake or sea, or loss of the main cooling tower) 165
5.2.3 Loss of the primary ultimate heat sink and the alternate heat sink 168
5.2.4 Conclusion on the adequacy of protection against loss of ultimate heat sink 169

5.2.5 Measures which can be envisaged to increase robustness of the plants in case of loss of ultimate heat sink ... 170
5.3 Loss of the primary ultimate heat sink, combined with station black out (see stress tests specifications) ... 170
5.4 Assessment and conclusions of the regulator ... 171
5.4.1 Status of the documents presented by the licensees ... 171
5.4.2 Assessment of the regulatory body ... 171
5.4.3 Conclusions ... 171

6 Severe accident management ... 174
6.1 Organisation and arrangements of the licensee to manage accidents ... 185
6.1.1 Organisation of the licensee to manage an accident ... 185
6.1.2 Possibility to use existing equipment ... 189
6.1.3 Evaluation of factors that may impede accident management and respective contingencies ... 190
6.1.4 Conclusion on the adequacy of organisational issues for accident management ... 193
6.1.5 Measures which can be envisaged to enhance accident management capabilities ... 193
6.2 Accident management measures in place at the various stages of a scenario of loss of the core cooling function ... 193
6.2.1 Before occurrence of fuel damage in the reactor pressure vessel/a number of pressure tubes (including last resorts to prevent fuel damage) ... 193
6.2.2 Measures after the occurrence of fuel damage in the reactor pressure vessel/in a number of pressure tubes ... 197
6.2.3 Measures after the failure of the reactor pressure vessel/a number of pressure tubes ... 198
6.3 Maintaining containment integrity after an occurrence of significant fuel damage (up to core meltdown) in the reactor core ... 199
6.3.1 Elimination of fuel damage/meltdown at high-pressure ... 199
6.3.2 Management of hydrogen risks inside the containment ... 200
6.3.3 Prevention of containment overpressure ... 202

6.3.4 Prevention of re-criticality 203
6.3.5 Prevention of basemat melt-through 204
6.3.6 Need for and supply of electrical AC and DC power and compressed air to equipment used for protecting containment integrity 205
6.3.7 Measuring and control instrumentation needed for protecting containment integrity 206
6.3.8 Capability for severe accident management in case of simultaneous core meltdown/fuel damage accidents in different units at the same site 207
6.3.9 Conclusion regarding the adequacy of severe accident management systems for the protection of containment integrity 207
6.3.10 Measures that can be envisaged to enhance capability to maintain containment integrity after an occurrence of severe fuel damage 208
6.4 Accident management measures to restrict radioactive releases 208
6.4.1 Radioactive releases after a loss of containment integrity 208
6.4.2 Accident management after uncovering of the top of fuel in the spent fuel pool 209
6.4.3 Conclusion on the adequacy of measures to restrict radioactive releases 212
6.5 Assessment and conclusions of the regulator 213
6.5.1 Status of the documents presented by the licensees 213
6.5.2 Assessment of the regulator 213
6.5.3 Conclusions (in view of improvements) 214

7 General Conclusion 219
7.1 Key provisions enhancing robustness (already implemented) 219
7.2 Safety Issues 221
7.3 Potential safety improvements and further work forecasted 221

Annex 1 Summaries of the licensees' reports

List of Tables

Table 0-1: The *Länder* Licensing and Supervisory Authorities for Nuclear Installations 5

Table 1-1: Site characteristics of German NPP subjected to EU “stress test” 19

Table 1-2: Main characteristics of German NPP subjected to EU “stress test”..... 21

Table 1-3: Depth of PSA analysis for the external hazards earthquake (SPSA), flooding (FPSA) and extreme weather conditions (WPSA)..... 75

Table 2-1: Characteristics of the DBE 79

Table 2-2: Secondary effects and infrastructure..... 83

Table 2-3: Seismic margins to fuel damage 92

Table 2-4: Seismic margins to loss of containment integrity..... 95

Table 3-1: Characteristics of the DBF 102

Table 3-2: Protection against DBF 105

Table 3-3: Safety margins against DBF 111

Table 4-1: Design regarding extreme weather conditions 118

Table 4-2: Design regarding low water level 121

Table 6-1: Implementation of accident management measures in BWRs (4/2011) . 182

Table 6-2: Implementation of accident management measures in PWRs (4/2011) . 183

List of Figures

Figure 0-1: Organisation of the Regulatory Body and its advisory bodies and independent technical support organisations 4

Figure 0-2: Sites of Nuclear Power Plants in Germany which are considered in the “EU stress test” 7

Figure 0-3: Procedure of the EU stress test in Germany 15

Figure 1-1: Cross-section of a PWR..... 28

Figure 1-2: Safety installations of the secondary circuit..... 30

Figure 1-3: Schematic drawing of the safety systems of a PWR 33

Figure 1-4: Cross section of BWR 72 containment (reactor building is not shown)..... 46

Figure 1-5: Safety systems of a BWR-72 50

Figure 1-6: Sketch of the emergency cooling and residual heat removal system of Gundremmingen NPP..... 52

Figure 1-7: Cross section of a BWR 69..... 60

Figure 1-8: Residual heat removal and emergency core cooling systems..... 64

Abbreviations

AC (power supply)	Alternating current
ADE	Automatic Pressure Relief
AHR	Additional Residual Heat Removal
AHRS	Additional Residual Heat Removal and Injection System
AM	Accident Management
Atomgesetz	German Atomic Energy Act
ATWS	Anticipated Transients without Scram
BDBE	Beyond Design Basis Earthquake
BDBF	Beyond Design Basis Flood
BMI	Federal Ministry of the Interior
BMU	Federal Ministry for the Environment, Nature Conservation and Nuclear Safety
BWR	Boiling Water Reactor
CCS	Component Cooling System
CDF	Core Damage Frequency
CNS	Convention on Nuclear Safety
DBA	Design Basis Accident
DBE	Design Basis Earthquake
DBF	Design Basis Flood
DC (power supply)	Direct Current
DID	Defence in Depth
DIN	Deutsches Institut für Normung (German institute for engineering standards)
ECC	Emergency Core Cooling
ECCS	Emergency Core Cooling System
EMS	European Macroseismic Scale
ENSREG	European Nuclear Safety Regulators Group
ESWS	Essential Service Water System
FPSA	Flooding Probabilistic Safety Assessment
GKN-I	Nuclear power plant Neckarwestheim unit 1
GKN-II	Nuclear power plant Neckarwestheim unit 2
GRS	Gesellschaft für Anlagen- und Reaktorsicherheit mbH
h_{DBF}	Height of Design Basis Flood
HEPA	High Efficiency Particulate Airfilter
HP	High Pressure

KBR	Nuclear power plant Brokdorf
KHG	Kerntechnischer Hilfsdienst Nuclear Support Organisation
KKB	Nuclear power plant Brunsbüttel
KKE	Nuclear power plant Emsland
KKG	Nuclear power plant Grafenrheinfeld
KKI-1	Nuclear power plant Isar unit 1
KKI-2	Nuclear power plant Isar unit 2
KKK	Nuclear power plant Krümmel
KKP-1	Nuclear power plant Philippsburg unit 1
KKP-2	Nuclear power plant Philippsburg unit 2
KKU	Nuclear power plant Unterweser
KRB II-B	Nuclear power plant Gundremmingen unit B
KRB II-C	Nuclear power plant Gundremmingen unit C
KTA	Kerntechnischer Ausschuss Nuclear Safety Standards Commission
KWB-A	Nuclear power plant Biblis unit A
KWB-B	Nuclear power plant Biblis unit B
KWG	Nuclear power plant Grohnde
KWO	Nuclear power plant Obrigheim
KWU	Siemens Kraftwerk Union
LOCA	Loss of Coolant Accident
LP	Low Pressure
MSL	Mean Sea Level
m MSL	meters above Mean Sea Level
MSK	Medvedev-Sponheuer-Karnik Scale
NPP	Nuclear Power Plant
p	Exceedance probability
PAR	Passive Autocatalytic Recombiner
pga	peak ground acceleration
PSA	Probabilistic Safety Assessment
PWR	Pressurized Water Reactor
RCS	Reactor Coolant System
REWAS	Reservewassersystem; stand-by water supply system
RHR	Residual Heat Removal
RHRC	Residual Heat Removal Chain
RPV	Reactor Pressure Vessel
RS	Control Rod Flushing Water System

RSK	Reactor Safety Commission
RWST	Refuelling Water Storage Tanks
RZ	Additional independent secondary feedwater system
SAM	Severe Accident Management
SAMG	Severe Accident Management Guideline
SBO	Station Blackout
SPSA	Seismic Probabilistic Safety Assessment
SR	Safety Review
SSC	Structures, Systems and Components
SSE	Safe Shutdown Earthquake
SSI	Soil Structure Interaction
STAFAB	Steuerstabfahrbegrenzung; control rod movement limitation
TE	Seal Water System
TEST	Teilsteuerstelle; Control Unit for Operation and Monitoring in case of specific external hazards
TF	Injection system
TG	Spent Fuel Pool Cooling System
TH	ECC and RHR system
TJ	Reactor core isolation cooling system
TK	Low-pressure safety injection system
TM	High-pressure injection system
TSO	Technical Safety / Support Organisation
TW	Liquid poison system
TX	Building Sump Suction System
UNS	Independent Emergency System
USAEC	United States Atomic Energy Commission
USUS	Independent sabotage and accident protection system
VDE	Verband der Elektrotechnik, Elektronik und Informationstechnik (organisation of electrical engineering, electronics and information technology)
VE	Cooling system
VGB	VGB PowerTech e. V
WPSA	Weather Probabilistic Safety Assessment
YT	Scram system
ZE	Switchgear Building

0 Legal framework and regulatory system and practices

The Federal Republic of Germany is a Federation with 16 Federal States. There are 18 nuclear power plants at 13 sites that fall under the EU stress test as requested by the European Council on 23/24th March 2011. These sites are situated in five Federal States. These plants are operated by four different utilities. The German nuclear regulatory body consists of the regulatory authority of the Federation and the regulatory authorities of the Federal States (*Länder*).

0.1 Regulatory body in Germany

Responsibilities for legislation and execution are assigned to the organs of the Federation and the Federal States - the Länder - according to their scope of functions. Specifications are given by provisions of the Basic Law /I/ of the Federal Republic of Germany.

The Federal Parliament has the legislative competence for the peaceful use of nuclear energy. The legal base for the peaceful use of nuclear power in Germany is the Atomic Energy Act /II/. The Atomic Energy Act is executed - with some exceptions - by the Länder on behalf of the Federal Government. In this respect, the Länder authorities are under the supervision of the Federation with regard to the lawfulness and expediency of their actions.

The "Regulatory body" in Germany is therefore composed of authorities of the Federal Government and authorities of the Länder governments. Each nuclear regulatory authority is a division of a ministry.

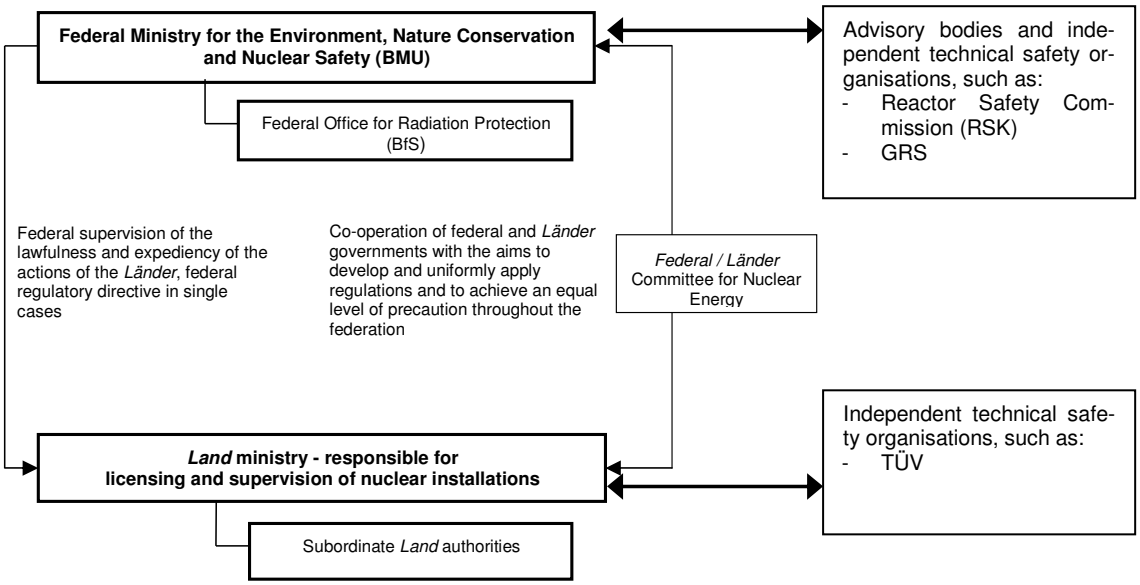

Figure 0-1: Organisation of the Regulatory Body and its advisory bodies and independent technical support organisations

By organisational decree, the Federal Government specifies the Federal Ministry competent for nuclear safety and radiation protection. In 1986, this competence was assigned to the then new established Federal Ministry for the Environment, Nature Conservation and Nuclear Safety (BMU). Hence the BMU is the supreme regulatory authority in charge of nuclear safety and security in Germany.

Licensing and supervision, inspection and enforcement as well as plant specific safety assessments and reviews of nuclear power plants are executed by the Länder on behalf of the Federation. In this respect, the Länder authorities are under the oversight of the Federation with regard to the legality and expediency of their actions.

Table 0-1: The *Länder* Licensing and Supervisory Authorities for Nuclear Installations

Land	**Nuclear Installations**	**Licensing Authority**	**Supervisory Authority**
Baden-Württemberg	Obrigheim Neckarwestheim 1 Neckarwestheim 2 Philippsburg 1 Philippsburg 2	Ministry of Environment, Climate Protection and the Energy sector in agreement with Economics Ministry and Interior Ministry	Ministry of Environment, Climate Protection and the Energy sector
Bavaria	Isar 1 Isar 2 Grafenrheinfeld Gundremmingen B Gundremmingen C	Bavarian State Ministry of the Environment and Public Health In agreement with State Ministry of the Economy, Infrastructure, Transport and Technology	Bavarian State Ministry of the Environment and Public Health
Hessen	Biblis A Biblis B	Ministry of the Environment, Energy, Agriculture and Consumer Protection	
Lower Saxony	Unterweser Grohnde Emsland	Ministry for Environment and Climate Protection	
Schleswig-Holstein	Brunsbüttel Krümmel Brokdorf	Ministry of Justice, Equality and Integration (MJGI)	

To understand how the EU stress test process has been implemented in Germany information is needed on related:

- political decisions and legislation (Chap. 0.2)
- regulatory activities on the Federal level regarding safety reviews and improvement processes with advice and support from RSK, BfS, GRS (Chap. 0.3 and 0.4)
- activities of the federal state regulator (Länder authorities) and independent expert support (Chap. 0.5)
- regulatory interactions of the licenses with the competent federal state authority

0.2 Political and regulatory decisions and legislation

Three month moratorium

On 14th March 2011, Chancellor Angela Merkel announced a 3-month moratorium on the recently decided extension of the operating lives of German nuclear power plants. On 15th March 2011, the first meeting of the Federal Government represented by Chancellor Angela Merkel and the five Prime Ministers of the Länder with nuclear power plants took place. Subsequently there was a meeting of the Federal Minister for the Environment, Nature Protection and Nuclear Safety as the competent Minister responsible for nuclear safety with the Ministers responsible for licensing and supervision of nuclear power plants of these five Länder.

The result was that all German nuclear power plants are to be subjected to a safety review by the Reactor Safety Commission (RSK) in the next three months. During the safety review, the operators had to shut down the nuclear power plants commissioned prior to 1980 ("Order to temporarily cease operation"). These were the nuclear power plants Biblis A and B (Hesse), Neckarwestheim I and Philippsburg I (Baden-Württemberg), Brunsbüttel (Schleswig-Holstein), Isar I (Bavaria), Unterweser (Lower Saxony). The Krümmel NPP (Schleswig-Holstein) was out of operation at that time. All others NPP's were reviewed during continued operation.

On 22th March, a second meeting of the Federal Government and the five Prime Ministers of the Länder with nuclear power plants took place. It was decided that in addition to the RSK safety review a re-assessment of the risks associated with the use of nuclear energy within a cross-social dialogue under the participation of the Ethics Commission "Secure Energy Supply" should be performed.

13th amendment to the Atomic Energy Act

On 6th June 2011, the Federal Cabinet adopted the draft of a 13th act to amend the Atomic Energy Act (in German).

This draft accounted for the results of the safety reviews of all nuclear power plants in Germany and the re-assessment of the risks associated with the use of nuclear energy by the Ethics Commission "Secure Energy Supply" . The main objective of this draft is to terminate the use of nuclear energy for commercial electricity production in Germany as soon as feasible.

The Amendment to the Atomic Energy Act was passed by the German Federal Parliament (Bundestag) on 30thJune 2011, approved by the German Federal Council (Bundesrat) on 08th July 2011 and entered into force on 6th August 2011. (see Federal Law Gazette 2011 Part I no 43, Bonn 5th August 2011 - in German).

The Amendment introduced the following main modifications of the Atomic Energy Act:

- The granting of further electricity production rights according to the 11th amendment of the Atomic Energy Act was cancelled.

- The licences for power operation of the seven oldest nuclear power plants (Biblis A, Neckarwestheim I, Biblis B, Brunsbüttel, Isar I, Unterweser, Philippsburg I) and the Krümmel NPP were terminated with the entry into force of the amended Atomic Energy Act on 6th August 2011.
- For the three youngest plants, the licences for power operation will expire in 2022 at the latest; for the other plants on a step-by-step basis until 2015/2017/2019/2021 at the latest.
- The transfer of electricity volumes will still be possible, provided that the respective end times are adhered to.

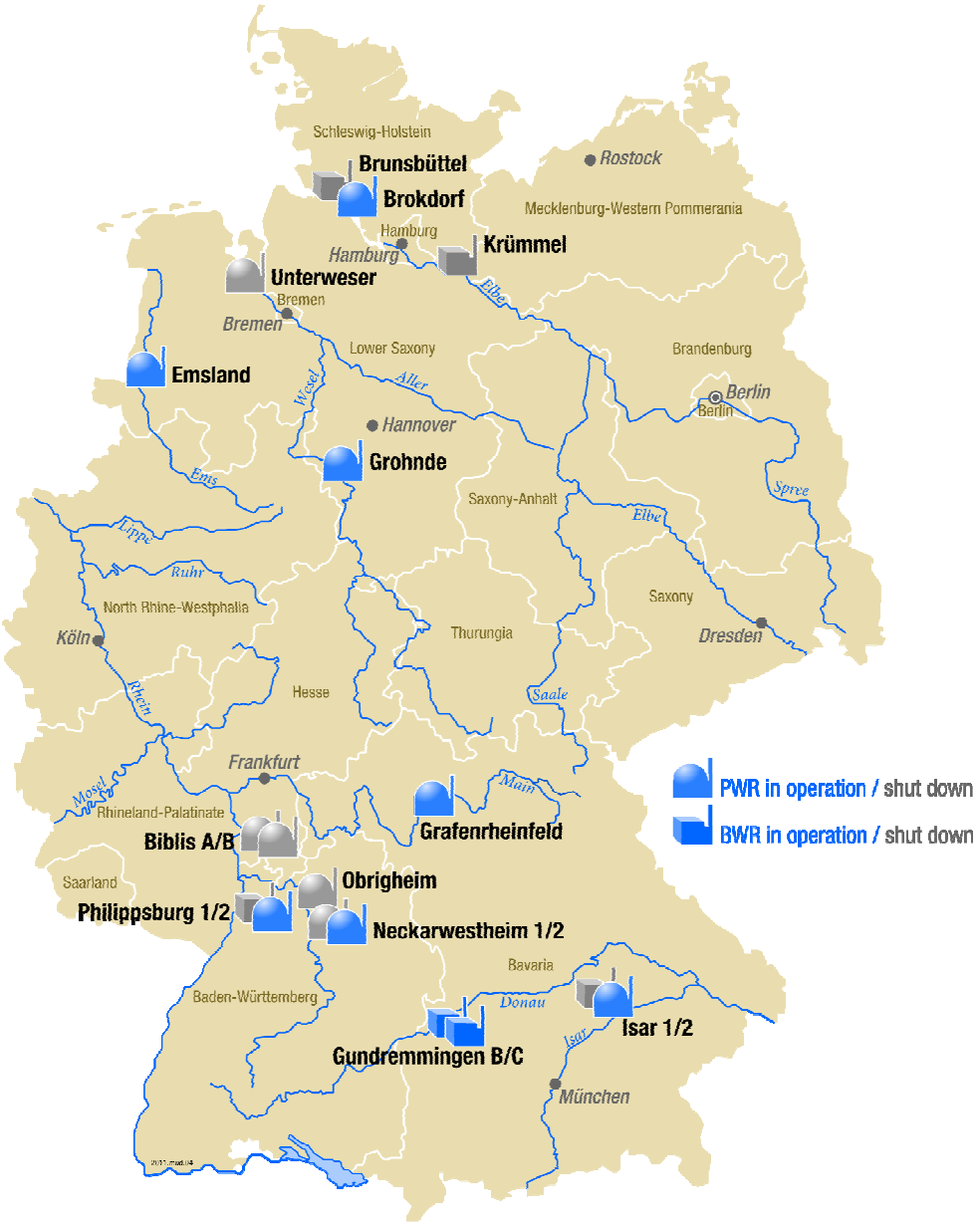

Figure 0-2: Sites of Nuclear Power Plants in Germany which are considered in the "EU stress test"

0.3 Strategic response of German nuclear safety regulators to new safety significant insights or accidents – Post Fukushima safety Reviews

During the past decades BMU in cooperation with the Länder authorities has developed different means for the strategic regulatory response to new safety challenges in particular related to nuclear accidents on the federal, more generic level. The plant specific regulatory activities are implemented on the Länder level.

In case of severe nuclear accidents that happened so far in foreign plants - in addition to emergency response activities as appropriate - comprehensive safety investigations by licensees, regulatory authorities supported by their independent expert organizations and safety reviews by the RSK/SSK have been performed. On request by the BMU comprehensive safety reviews have been conducted by the RSK after the TMI 2 and Chernobyl as well after the Fukushima accidents resulting in recommendation for strengthening defence in depth of the operating reactors.

Main strategic regulatory actions of the BMU have been based upon the regulatory review of results and recommendations of the RSK safety reviews and related investigations by the GRS as part of the nuclear safety regulatory research.

After the TMI accident in 1979 such regulatory actions were related to:

- measures to enhance the reliability of prevention and control of design base accidents
- improvements of the regulatory approach to human and organizational factors
- development of guidance for strengthening the role of PSA in safety reviews
- consideration of beyond design conditions and related regulatory research

After the Chernobyl accident in 1986 regulatory actions were focused on:

- development and implementation of preventive and mitigative accident management. The related regulatory requirements and recommendations are reported in the generic part of Chapter 6.
- periodic safety reviews (PSR): safety status, PSA, security status. For such safety reviews detailed guidance documents have been published by the BMU after consultation with the Länder Authorities. They are now applied by the licensees for their reviews to be submitted to the Länder Authorities.

These safety reviews and regulatory follow up actions address both: the robustness of the defence in depth within the design base as well as the extension of robustness to selected beyond design base challenges or conditions. In the context of the now legally required safety reviews (Art. 19 a AtG) after ten years of operation the safety and protection levels have to be reassessed using current site conditions and impacts conceivable at the plant site. These regular safety reviews in particular have to address protection against hazards based on the current state as well as the implementation of on-site or plant internal emergency measures (preventive and mitigative accident management measures).

For the management of beyond design base conditions a KTA standard for “Emergency Manuals” has been established. Respective manuals have been submitted by the licence holders to the Länder authorities within the regulatory oversight process. For some accident management measures the licensees had to apply for the licensing of hardware modifications. The BfS on behalf of the BMU has compiled and continuously updated an overall status report of the implementation of AM-measures recommended by the RSK and requested by the BMU. In 1996 the KTA has published a its KTA report 66: “Compilation of Plant-internal Accident Management Measures and Correspondence Check with KTA Safety Standards”.

Additional means are practiced by the BMU in cooperation with the Länder authorities addressing generic lessons to be learned from operational experience. The GRS is

contracted by BMU to evaluate national as international operational for generic aspects and to prepare GRS Weiterleitungsnachrichten (WLN, Information Notices) if appropriate. In such notices safety significant events are analysed for generic lessons to be learned. Due to licensing conditions the Länder authorities can request a response from their licensees on possible lessons they draw from the such an information notice and from their own evaluation of the respective event. The GRS Information Notice to the “Forsmark” event for example resulted in a systematic review of the robustness of the power supply of nuclear power plants. GRS has already been asked to prepare an Information Notice (WLN) on the Fukushima accident.

The current safety reviews in response to the Fukushima accident therefore could be based on review methods and practices established as consequences from former safety reviews as well as on the extension of the defence in depth concept to beyond design base events and conditions. But compared to former reviews the safety review methodology as defined by the RSK or as specified in the ENSREG declaration follows an even more challenging approach: the plant response to extreme external and internal impacts and aggravating conditions in the environment of the plant combined with assumptions of additional losses of safety functions has to be analysed and assessed. In these scenarios, the sequential loss of safety functions and lines of defence is assumed in a deterministic way, irrespective of the probability of such failures and losses. Based on the current plant status (for the EU stress test status at the 30th June 2011) and behaviour as verified under the supervision of the regulator and supplemented by additional analyses and engineering judgment, any possible weaknesses are to be identified. Measures that can be taken under such extreme conditions to prevent or mitigate severe consequences are systemically analysed, including the assessment of robustness of design features, adequacy of protective measures and possible cliff edge effects.

Such extreme scenarios have only partly considered in former licensing and supervisory procedures of the regulator. Instead, all measures had to be taken and assured that such extreme challenges can practically be excluded as a licensing prerequisite.

The current stress test will allow an in depth review of the robustness of design and additional precautionary measures including the extension to beyond design basis accidents.

In Germany the RSK safety review was started on 17th March 2011 and results were published on 16th May 2011. (RSK Stellungnahme) The RSK has specified follow up activities that will continue beyond 2011.

The Federal Government, in particular BMU and its experts were involved in the definition of the preparation of the comprehensive risk and safety assessments ("stress tests") of nuclear power plants in the European Union specified by WENRA and ENSREG and agreed on 12th - 13th May 2011 The methodology, scope and depth of these two approaches show differences in their approach and presentation of results.

0.4 RSK safety review and follow up actions

0.4.1 Scope and method of the RSK safety review

The RSK review covered not only events related directly to the Fukushima accident. As requested by the Federal Government a broader spectrum of impacts due to initiating events conceivable at the site such as man made hazards including aircraft crash, blast wave and toxic gases were analysed. Moreover, also terrorist and cyber attacks have been considered. The robustness of precautionary measures was assessed. The

scope and approach with regard to man made hazards and results are addressed in chapter 4.

For its safety review the RSK received reports from the licensees. RSK was supported by GRS, the expert organisation of the BMU and other experts in particular Länder and TÜVs. Due to short time schedule some of these reports could only be preliminary.

The RSK endorsed the catalogue of requirements for plant-specific reviews of German nuclear power plants in the light of the events in Fukushima I. It should be assessed whether the current design limits had been defined correctly and how robust the German nuclear power plants are regarding beyond-design-basis events.

The methodology of the RSK approach was based on the concept of robustness levels. To assess robustness four levels (basic and level 1 to 3) have been defined by the RSK for any topic. These levels reflect the assurance of the required safety functions and to prevent „cliff edges“. The RSK based its review on licensee reports that have been prepared on the basis of a questionnaire.

On the basis of the generic insights gained the accident sequence in Japan, the RSK derived the following need for review for the German nuclear power plants:

- Examination of to what extent the fundamental safety functions "reactivity control", "cooling of fuel assemblies in the reactor pressure vessel as well as in the fuel pool" and "limitation of the release of radioactive substances (maintaining of the barrier integrity)" are fulfilled in the event of impacts beyond the design requirements applied so far.
- Examination of to what extent the system functions for fulfilling the fundamental safety functions remain available for assumptions going beyond the scenarios postulated so far.
- Review of the necessary scope of accident management measures and their effectiveness.

One focus of the review regarding the robustness of all installations and measures was on the identification of an abruptly occurring aggravation in the event sequence (cliff edges) and, if necessary, on the derivation of measures for its avoidance (example: exhaustion of the capacity of the batteries in the event of a station blackout). Included in the scope of the review were:

- Natural hazards such as earthquakes, flooding, weather-related effects as well as possible simultaneous occurrences.
- Postulates that are independent of concrete event sequences, such as failures affecting several redundant system trains, (common-cause failures, systematic failures), station blackout for longer than two hours, long-lasting loss of essential service water supply.
- Aggravating boundary conditions for the performance of accident management measures, such as non-availability of electricity supply, hydrogen formation and explosion risk, restricted availability of personnel, inaccessibility due to high radiation levels, impairment of external technical support.

Based on the robustness levels determined for each issue, the RSK came to the following conclusion:

> *“It follows from the insights gained from Fukushima with respect to the design of these plants that regarding the electricity supply and the consideration of external flooding events, a higher level of precaution can be ascertained for German plants.*

The RSK has furthermore reviewed the robustness of German plants with respect to other important assessment topics.
The assessment of the nuclear power plants regarding the selected impacts shows that for the topic areas considered, there is no general result for all plants in dependence of type, age of the plant, and generation.
The existing plant-specific design differences according to the current state of licensing were only partially considered by the RSK. Plants that originally had a less robust design were back fitted with partly autonomous emergency systems to ensure vital functions. In the robustness assessment performed here, this selectively leads to evidentially high degrees of robustness.
The RSK has derived first recommendations for further analyses and measures from the results of the plant-specific review."

The assessment of the nuclear power plants regarding the selected impacts shows that for the topic areas considered, there is no general finding for all plants in dependence of type, age of the plant, and generation.

The existing plant-specific design differences according to the current state of licensing were only partially considered by the RSK. Plants that originally had a less robust design were back fitted with partly autonomous emergency systems to maintain the fundamental safety functions. In the robustness assessment performed here, this selectively leads to evidentially high degrees of robustness.

0.4.2 On-going RSK work programme

The RSK is continuing its work on issues of special interest identified so far. The results and the on-going work programme are available on the homepage of the Reactor Safety Commission (http://www.rskonline.de/English/index.html).

Based on the results of the plant-specific safety review of German nuclear power plants in the light of the events in Fukushima-1 the RSK agreed on the topics to be further dealt with:

Earthquake

The Review if all conditions of low-power shutdown operation (e.g. flooded reactor cavity during refuelling) have been considered.

Flood

Review of the protection of canals and buildings regarding the intrusion of water and the floating resistance in the case of a higher level flood. Assumed postulate: flooding of the plant site.
Review of the accessibility of the plant buildings in the case of longer-term flooding.

Station blackout

Review of specific situation of low-power shutdown operation and storage of the fuel assemblies in the fuel pool. Battery capacities, safety margins of the plants, demand for 10 hours of availability.

Loss of offsite power

Review of Long-lasting loss of offsite power, superimposition of an aftershock with operation of the emergency diesels.

Loss of service water supply

Robustness of the existing service water supply requirements under consideration of account current operating experience, also taking into account the cooling of the fuel

assemblies both in the fuel pool and in the reactor core during low power shutdown operation.

Precautionary measures

In-depth examination of precautionary measures to prevent load crashes in the area of the primary system and the fuel pool.
Generic aspects of “flooding of the annulus” in PWR plants

Accident management measures

Further development of the accident management concept under external hazard conditions (re-establishment of the supply of three-phase alternating current, injection possibilities for the cooling of fuel assemblies, identification of available safety margins, consideration of wet storage of fuel assemblies, etc.).
Review of the supplementation of the requirements on accident management (SAMG) and the optimisation of available measures.

Aircraft crash

Consequential mechanical effects due to an aircraft crash that lead to a limited loss of coolant.
Protection of the fuel pool of plants in decommissioned.

Release of explosive and toxic gases in the vicinity of plants

Verification of adherence to safety margins in the case of blast waves and site-specific consideration of toxic gases.

Effects of an accident in one power plant unit on the neighbouring unit

Based on the damage states of a power plant unit, the consequences for the maintaining of the fundamental safety functions of the unaffected unit are to be examined.

Generic issues

Superimposition of events with system operating conditions of short duration (e.g. superimposition of earthquakes with loaded fuel assembly transport casks attached to a crane).
Long-term operation and post-operational phase of the fuel pools.
Impact on grid stability.

The RSK has requested their expert committees to resume consultations on the respective topics. The results of these consultations will be considered for the final report.

0.5 Follow up activities of the Länder Authorities

At its 56th meeting on 24th May 2011, the Reactor Safety Technical Committee (Fachausschuss Reaktorsicherheit – FA RS) of the Länder Committee for Nuclear Energy (LAA) discussed the results of the RSK Safety Review and concluded the following:

> *“The Reactor Safety Technical Committee takes note of the report of the RSK. The Reactor Safety Technical Committee asks the BMU to evaluate the RSK statement, in particular also with regard to the current regulatory issues and with regard to possible new design requirements, and to bring appropriate proposals into the discussions between the Federation and the Länder. The Reactor Safety Technical Committee asks the BMU to commission the RSK with the continuation of the consultations with the aim of clarifying unclear issues and open questions. The Länder, in turn, will evaluate the RSK statement with regard to the plants under their supervision.”*

By a BMU letter dated 20th June 2011 the Federal State authorities were asked to initiate further clarifications with their licensees and to further support the work of the RSK.

On 19th October BMU asked the Länder authorities on the states of implementation of RSK recommendations. In their responses the Länder authorities reported on achievements and ongoing investigations and assessments.

These activities and responses by the Länder authorities can be based on continuous supervision of the plant's safety status, operational experience and safety records. As reported at CNS- Review Meetings nuclear installations are subject to continuous regulatory supervision over their entire lifetime - from the start of construction to the end of decommissioning with the corresponding licences - in accordance with the Atomic Energy Act and accessory nuclear ordinances.

Supervision is performed by the Länder authorities. The Länder are assisted by independent authorised experts (TÜV and other expert organisations). The decisions on supervisory measures to be performed are taken by the regulatory authority. The supervisory authority pays particular attention to:

- the fulfilment of the provisions, obligations and ancillary provisions imposed by the licence notices,
- the fulfilment of the requirements of the Atomic Energy Act, the nuclear ordinances and the other nuclear safety standards and guidelines, and
- the fulfilment of any supervisory order.

To ensure safety, the supervisory authority Länder monitors, also with continuous support by its authorised experts,

- the compliance with the operating procedures,
- the performance of in-service inspections of components and systems important to safety,
- the evaluation of reportable events,
- the implementation of modifications of the nuclear installation or its operation,
- the radiation protection monitoring of the nuclear power plant personnel,
- the radiation protection monitoring in the vicinity of the nuclear installation, including the operation of the independent authority-owned remote monitoring system for nuclear reactors,
- the compliance with the authorised limits for radioactive discharge,
- the measures taken against disruptive action or other interference by third parties,
- the trustworthiness and technical qualification and the maintenance of the qualification of the responsible persons as well as of the knowledge of the otherwise engaged personnel in the installation, and
- the quality assurance measures.

In accordance with the Atomic Energy Act, the authorised experts called in by the supervisory authority have access to the nuclear installation at any time and are authorised to perform necessary examinations and to demand pertinent information

0.6 EU Stress test in Germany

The implementation of the EU "stress test" process in Germany could build on the practices described above and on the post Fukushima safety reviews of the RSK as requested by BMU and with expert support by GRS as well as on the respective activities of the Länder authorities and their expert organisations. These reviews and regulatory

activities will continue parallel to the EU stress test and beyond taking the results and insights from the EU stress test into account.

The implementation followed the methodology and the schedule in the ENSREG declaration. Regarding the technical scope of the "Stress test" for the report there was no common European interpretation of inclusion of extreme weather conditions and of the assessment of the loss of safety functions triggered by indirect initiating events, for instance large disturbances from electrical power grid impacting AC power distribution systems or forest fire and airplane crash.

Therefore in the national report of Germany the methodology of the RSK safety review will be briefly described. Results related to the loss of safety functions from any initiating event conceivable at the plant site will be referenced. These events include man made hazards, such as airplane crash and cyber attack. Germany recognizes that these issues will not be addressed in the peer review process.

The ENSREG Declaration uses some terms which are important for the assessment:

> **"Stress test"** is defined as a targeted reassessment of the safety margins of nuclear power plants in the light of the events which occurred at Fukushima: extreme natural hazards challenging the plant safety functions and leading to a severe accident.
>
> **"Cliff edge"** is defined as a step change in the event sequence. Examples are the exhaustion of the capacity of the batteries in the event of a station black out or exceeding a point where significant flooding of the plant area starts after water overtopping a protection dike.

These terms as well as the term "robustness" need to be developed further in the context of the defence in depth concept and the related safety and design concept as applied to the plants to enable a common understanding.

0.6.1 Initiation and Performance in Germany

The BMU asked by letter of 31stMay 2011 the Länder authorities to initiate the EU stress for those NPPs under their regulatory supervision that fall under the ENSREG Declaration. The "stress tests" were started by all German licensees latest on 1st June 2011 with the self-commitment to deliver the progress report until 15th August 2011 and the final report until 31st October 2011 as requested by the ENSREG Declaration to the Länder authority.

On invitation by the BMU a joint meeting of the regulatory authorities of the federation and the federal states concerned, of their designated safety experts (TÜV, GRS) and the licensees was held on 30th June 2011. The necessary activities of the parties involved, the timeframes of the activities and issues of process implementation were discussed and agreed. It was also agreed to take the date of 30th June 2011 as reference date for the description of all plants within this report. The plants which were taken out of operation at that time due to the above mentioned moratorium (see Chapter 0.2) were considered "in operation" and no credit was taken of any possible legal decision related to the future operation of these plants.

The basic procedure of the EU stress test in Germany is shown in Figure 0.3:

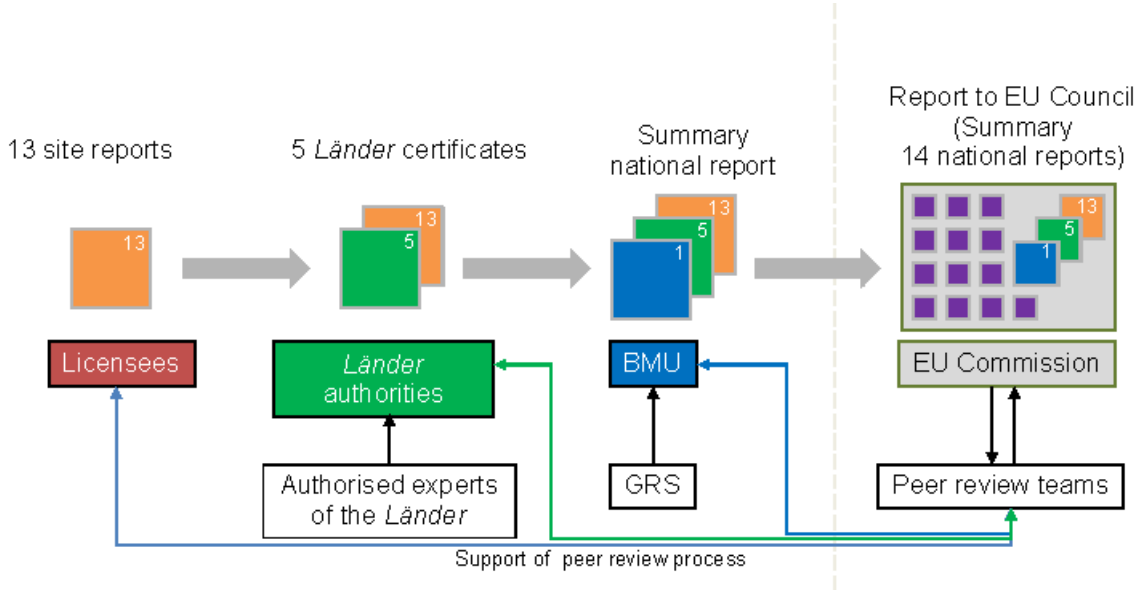

Figure 0-3: Procedure of the EU stress test in Germany

0.6.2 Reports of the German licensees

The licensees agreed on a common structure of the licensee's reports which covered the requirements and methods of the ENSREG Declaration to be applied for all 13 sites in Germany. This structure was developed by an ENSREG task force under consideration of a proposal of NPP licensees in the EU. The version of 05 September 2011 was used by the German licensees. The proposed structure was accepted by the regulators.

In the licensee's reports, the respective plants of each site are examined site by site, with special consideration of the site-specific conditions. By the deadline of 31st October 2011 all licensees had submitted their final reports with an extent of 100 to 200 pages to the Länder authorities.

These reports contain information on plant design, statements concerning design margins, plant robustness beyond design, a discussion of so-called “cliff edge” effects, conclusions about the adequacy of safety measures and potential for further improvements. Whenever useful, the relevant operating phases are specified in the separate sections along with any other relevant boundary conditions. For those parts of the assessment that go beyond the scope of plant design, the information provided is based partly on engineering judgment. The following reports were made available to the competent Länder authority:

- Final reports for each of the 13 sites in some cases split in two parts
    - Main part without sensitive security information designated for publication by the licensee (German)
    - Annex to the main report with information that is related to security aspects as appropriate (German)
- Summary report (English)

For the German national report a compilation of all Summaries is made available (see Annex 1).

In their reports the licensees refer also to extensive analyses of the German plants that have considered the impact of aircraft crashes and blast waves. The protection of some safety functions and the feasibility of accident management measures under such impacts have been discussed. The licensees state that additional reserve margins

exist beyond design. As not requested by the ENSREG structure for licensee reports detailed analyses for airplane crash have not been included.

0.6.3 Reviews and certificates of the Länder authorities

It was commonly agreed with the Länder regulatory authorities to prepare review certificates on the respective licensees' reports.

The Länder authorities have initiated reviews of the submitted reports and references by the authorized experts from the beginning. Since the licensee's submittals for the RSK safety review in March/April 2011 amended documentation and verifications have been submitted by the licensees.

The Länder authorities reviewed the licensees' reports (with support from experts organisations) and prepared an overall regulatory assessment for the main topics such as earthquakes, flooding, loss of safety functions and accident management. The reviews refer to the licensing and plant status as of 30th June 2011.

The review certificates of the Länder authorities for the licensee reports were forwarded to the BMU by the federal state regulators early December 2011. In their certificates the Länder authorities have addressed – as agreed before - the following review aspects:

1. Completeness of topics addressed by the licensees
2. Adequate application of the ENSREG methodology
3. Correct classification of the referenced documentation
4. appraisal of the engineering judgement (plausibility)
5. Assessment of improvements proposed to increase the robustness
6. Short overall appraisal

Regarding the first two aspects in general it was confirmed with few exemptions that the responses were complete and that the licensee reports closely followed the ENSREG specification and methodology.

Documentation referenced by the licensees has been categorized as follows:

- category 1: reviewed and confirmed in a licensing or supervisory procedure
- category 2a: formally submitted for a licensing or supervisory procedure
- category 2b: not formally submitted for a licensing or supervisory procedure, but with quality assurance by the licensee.

The Länder authorities pointed out that there are differences in scope and depth of regulatory review of the documentation for the design base area and the beyond design base area depending on the availability of codes and standards and assessment criteria. For some accident management measures in the beyond design base standards or specifications are available such as the KTA standard for the emergency manual or specifications for venting systems. For some other measures standards or criteria have not been agreed so that the effectiveness of planned measures for beyond design base conditions or the resistance under extreme loads can not fully be confirmed in all cases with the same quality. In addition it was stated by the Länder authorities that the licensees did not report on cliff edge effects. This is due to the fact that the licensees have agreed to use a specific IAEA definition. There was no ENSREG guidance which definition should be used.

With these reservations the Länder authorities have confirmed that in general the classification of the documentation and the statements in the licensee reports are correct.

Regarding the fifth item on improvement both are assessed: applications or proposals by the licensees as well as improvements under consideration by the regulators and the RSK.

The overall appraisals and conclusions have been summarized by the authorities of the Federation and the Länder in the final chapter.

0.6.4 Reviews and assessments by the BMU

The BMU was involved from the beginning in the development of and decision making on the EU stress test process in particular in the agreement of scope and methodology as addressed in the ENSREG declaration. BMU introduced experience from the RSK safety review into this process. BMU requested that a much broader scope of events should be reviewed. This was only partially included in the ENSREG declaration.

The BMU initiated, organised and moderated the cooperation between the parties involved: Länder authorities, authorized experts and licensees. Two main meetings and four smaller working meetings were held to manage the process. Due to the tight schedule and ongoing work after the RSK safety review the RSK could not be asked for advice on EU stress test matters.

Regarding external events conceivable at the plant sites the BMU decided to report on the respective reviews by the RSK and referred to ongoing work in particular with respect to impacts such as airplane crash in Chapter 4.

In its technical reviews the BMU was supported by the GRS. The BMU prepared the site independent regulatory requirements and other relevant regulatory guidance for the technical chapters. Licensee reports and the certificates of the Länder authorities were reviewed by BMU against these references. BMU also referred to related insights from RSK recommendations, Information notices and international cooperation in general.

0.6.5 The final national report

The German report follows guidance decided by ENSREG on 11 October 2011: “Post-Fukushima “stress tests” of European nuclear power plants – contents and format of National Reports”. The final national report presents the current status and results achieved so far from both approaches: the RSK safety review and the EU stress test.

The assessments and conclusions of the regulators have been summarized under the heading: “Assessment and Conclusions of the German Regulatory Body ”. These summaries are based on the contributions of the BMU and the Länder authorities each within its respective competencies and responsibilities.

During drafting the national report was exchanged between all participants for comment and improvement. The final report was agreed between the authorities of the Federation and the Federal States with amendments made by BMU referring to the RSK safety review.

References

/I/ Grundgesetz für die Bundesrepublik Deutschland vom 23. Mai 1949 (BGBl.I 1949, Nr. 1, S. 1), geändert bzgl. Kernenergie durch Gesetz vom 23. Dezember 1959, betreffend Artikel 74 Nr. 11a und 87c (BGBl.I 1959, Nr. 56, S. 813), erneut geändert bzgl. Kernenergie durch Gesetz vom 28. August 2006 betreffend Artikel 73, 74 und 87c (BGBl.I 2006, Nr. 41, S. 2034)

/II/ Gesetz über die friedliche Verwendung der Kernenergie und den Schutz gegen ihre Gefahren (Atomgesetz - AtG) in der Fassung der Bekanntmachung vom 15. Juli 1985 (BGBl.I 1985, Nr. 41, S. 1565), zuletzt geändert durch Artikel 1 Dreizehntes Änderungsgesetz vom 31. Juli 2011 (BGBl.I S. 1704)

1 General data about the sites and nuclear power plants

1.1 Brief description of the sites characteristics

Within the framework of the European stress test, 18 nuclear power plants at 13 sites were analysed according to their status as at 30th June 2011. Of these plants, 17 had an operating license until that date. For two plants there is a particular situation:

- The Obrigheim plant has been permanently shut down since 2005 and is in decommissioning since 2008. The reactor and the spent fuel pool inside the containment are completely unloaded. All remaining 342 fuel assemblies are stored in a spent fuel pool in a separate emergency building, which is protected against external hazards.
- The plant Brunsbüttel (KKB) has been permanently shut down since 2007. KKB presents an application for approval according to §7 of the German Atomic Energy Act regarding "improvement of the safety system". Before the political decision of a permanent shut down the plant was not allowed to restart till the modification measures are implemented. The basis for the description and answers in this report is the target state of the safety system after the modifications applied for.

According to the definition of the "General Aspects" in the ENSREG Declaration, these plants also have to be considered in the "stress test".

As a result of a political decision in the aftermath of the Fukushima event some older plants are in permanent shutdown since the moratorium. This decision is based on an amendment of the Atomic Energy Act which entered into force on 6th August 2011. The eight plants which are in permanent shutdown (beside of the Obrigheim plant) are signed with a * in the table below.

Table 1-1 gives an overview of the site characteristics like location, number of units and license holder. A more detailed description of the site locations can be found in Annex 1 with the summaries of the licensees. Annex 1 includes also the links to the webpages with the licensee reports (in German).

Table 1-1: Site characteristics of German NPP subjected to EU "stress test"

Site	Name of unit(s)	Plant Type	Location	License holder
Biblis	Biblis A* Biblis B*	PWR PWR	Two similar units at river upper Rhein	RWE Power AG
Brokdorf	Brokdorf	PWR	Single unit at river lower Elbe	E.ON Kernkraft GmbH Kernkraftwerk Brokdorf GmbH & Co. oHG
Brunsbüttel	Brunsbüttel*	BWR	Single unit at river lower Elbe	Kernkraftwerk Brunsbüttel GmbH & Co. oHG
Lingen	Emsland	PWR	Single unit at river Ems	Kernkraftwerke Lippe-Ems GmbH
Grafen-rheinfeld	Grafen-rheinfeld	PWR	Single unit at river Main	E.ON Kernkraft GmbH

Site	Name of unit(s)	Plant Type	Location	License holder
Grohnde	Grohnde	PWR	Single unit at river Weser	E.ON Kernkraft GmbH Gemeinschaftskernkraftwerk Grohnde GmbH & Co. oHG Gemeinschaftskernkraftwerk Weser GmbH
Gundremmingen	Gundremmingen B Gundremmingen C	BWR BWR	Two similar units at river Donau	Kernkraftwerk Gundremmingen GmbH
Isar	Isar 1*	BWR	Two different units at river Isar	E.ON Kernkraft GmbH
	Isar 2	PWR		E.ON Kernkraft GmbH Stadtwerke München GmbH
Krümmel	Krümmel*	BWR	Single unit at river Elbe	Kernkraftwerk Krümmel GmbH & Co. oHG
Neckarwestheim	Neckarwestheim I* Neckarwestheim II	PWR PWR	Two different units at river Neckar	EnBW Kernkraft GmbH
Philippsburg	Philippsburg 1* Philippsburg 2	BWR PWR	Two different units at the upper Rhein	EnBW Kernkraft GmbH
Unterweser	Unterweser*	PWR	Single unit at the lower Weser	E.ON Kernkraft GmbH
Obrigheim	Obrigheim	PWR	Single unit in decommissioning and dismantling phase at the Neckar	EnBW Kernkraft GmbH

1.1.1 Main characteristics of the units

In Germany there are plants with pressurised water reactors (PWR) and boiling water reactors (BWR) of different construction lines in operation. All plants have been build by Siemens Kraftwerk Union (KWU). Similar Plants are under operation in Spain, Netherlands and Switzerland. According to the time of their construction, the nuclear power plants with pressurised water reactors can be classified according to four construction lines, whereas those with boiling water reactors belong to two different construction lines. The construction line is given for each plant in the second column of Table 2.

The plants of the 1st construction line of pressurised water reactors (Obrigheim and Stade) have meanwhile been shut down. The 2nd construction line consists of PWRs which went into operation in the end of the 70ties. These have been succeeded by the so called “pre-Konvoi” plants of construction line 3 in the 80ties. The 4th construction line consists of three plants of the so called Konvoi type. Table 1-2 gives an overview on the main characteristics of the units.

Table 1-2: Main characteristics of German NPP subjected to EU “stress test”

Name of unit	Type; Construc-tion line	thermal power [MW]	1. Criticality	Location of spent fuel storage
Biblis A*	PWR 2	3517	16.07.1974	in containment
Biblis B*		3733	25.03.1976	
Brokdorf	PWR 3	3900	08.10.1986	in containment
Brunsbüttel*	BWR 69	2292	23.06.1976	in reactor building outside containment
Emsland	PWR 4	3850	14.04.1988	in containment
Grafen-rheinfeld	PWR 3	3765	09.12.1981	in containment
Grohnde	PWR 3	3900	01.09.1984	in containment
Gund-remmingen B	BWR 72	3840	09.03.1984	in reactor building outside containment
Gund-remmingen C			26.10.1984	
Isar 1*	BWR 69	2575	20.11.1977	in reactor building outside containment
Isar 2	PWR 4	3950	15.01.1988	in containment
Krümmel*	BWR 69	3690	14.09.1983	in reactor building outside containment
Neckar-westheim I*	PWR 2	2497	26.05.1976	in containment
Neckar-westheim II	PWR 4	3850	29.12.1988	
Philippsburg 1*	BWR 69	2575	09.03.1979	in reactor building outside containment
Philippsburg 2	PWR 3	3950	13.12.1984	in containment
Unterweser*	PWR 2	3900	16.09.1978	in containment
Obrigheim	PWR 1	1050	22.09.1968	in external Emergency Building

1.1.2 Description of the systems for conduction of main safety functions

1.1.2.1 Basic design concept of German nuclear power plants

In the following the licensees describe the design philosophy of the German NPP.

As required by the ENSREG specifications, the precautionary measures in plant design against the postulated scenarios must be described and the robustness of the plant beyond the design basis assessed. To that end, the basic design concept on which the German nuclear power plants are based must be considered first, as the safety concept of the plants operated in Germany has some special characteristics that are important for a proper assessment of robustness and that therefore should be summarised.

According to the intent of the German Atomic Energy Act (Atomgesetz) and related decisions of the German Federal Constitutional Court, the principle of the best possible precaution against damage applies in nuclear engineering. This principle requires that plants be operated only if their safety has been proved beyond doubt and a sufficient safety margin from all conceivable danger thresholds is maintained. Accordingly, even extremely improbable events must in principle be postulated and controlled and may be disregarded only if the event is – on the basis of practical rationality – deemed impossible.

The nuclear power plants in Germany are designed and operated so that, either during specified normal operations or in the event of an accident, the nuclear reactor can be safely shut down and kept in safe state, the residual heat can be removed, the confinement of radioactive materials is ensured, and the exposure of plant personnel and the general population to radiation is kept as low as technically possible.

Defence-in-depth safety concept and fundamental safety functions

The main goal for the protection of persons and the environment is to secure confinement of the radioactive materials resulting from operation of the nuclear power plant. As an international standard (IAEA safety requirements), a multilevel safety concept (defence-in-depth concept) with the following features was implemented for that purpose in the design of German nuclear power plants:

- Isolation of the radioactive materials from the environment by means of a system of multiple enclosing barriers (barrier concept)
- A system of measures on multiple levels (defence-in-depth levels) that ensures that the integrity and function of the barriers is adequate
- Technical solutions for safety systems that, even in the event of postulated malfunctions (technical failure or human error), ensure the protection of the barriers (design principles for safety systems).

To ensure that the confinement of radioactive materials is effective even in accidents, the barriers must be adequately protected against damage. The fundamental safety functions for reactor safety are:

- <u>Confinement of radioactive materials:</u> Confinement of the radioactive materials contained in the fuel elements must be secured by means of barriers.
- <u>Control of reactivity:</u> The reactor must always be limited in its output and reliably capable of being shut down to prevent excessive heat generation that cannot be removed by the available cooling systems.

- Cooling of fuel elements: It must be possible to safely remove the heat that results from radioactive decay even after the reactor has been shut down, so that the internal barriers are not endangered by overheating.

Defence in depth levels

Compliance with the fundamental safety functions, and with it the effectiveness of the barrier system, is ensured by means of multiple levels of measures assigned to "defence in depth levels". The basic idea of the defence in depth (DID) levels consists in the following:

- Measures are taken on one DID level to avoid failures and breakdowns as much as possible.
- Failures are nevertheless assumed ("postulated") and corrective actions are provided at the next DID level to compensate for or control the postulated failures.

On this basis, four defence in depth levels for plant safety have been defined:

Defence in depth level 1: Avoidance of deviations and accidents through a far-reaching design concept with equipment of high and monitored quality and with certified and regularly trained personnel (normal operation).

Normal operation without deviations is ensured by conservative design and comprehensive quality assurance, including the use of high-quality components and plant items (optimal design and manufacturing processes along with special materials and extensive tests as well as in-service inspections through the entire life of the components and of the plant in general), integration of high safety margins into overall planning, a regulated mode of operation, and the use of qualified operating personnel.

Defence in depth level 2: Control of deviations from normal operation that are postulated anyway and avoidance of accidents through limiting measures (abnormal operation).

Fault alarms and limiting systems are present so that operational deviations beyond the control range usual for normal operation can be detected and controlled. If certain thresholds are exceeded, a correction is made automatically so that a progression into accident conditions is avoided and the power plant remains within the limits of its operational design. Light water reactors have in addition self-stabilising operating characteristics.

Defence in depth level 3: Control of accidents that are postulated to occur anyway, by means of safety systems specially engineered and designed for reliable accident control. This includes, in particular, designing the equipment and components needed to provide the fundamental safety functions for compliance with the protection goals to withstand naturally caused and man-made events (accident control).

If the precautions at the preceding defence in depth levels are not effective, the result may be an accident, which the plant controls with specially designed safety systems. A large number of conservatively covered event sequences referred to as "design basis accidents" are used as the basis for dimensioning and designing these safety systems. In the event of the design basis accidents specified for German nuclear power plants, the reactor protection system, together with the key safety systems, guarantees that the reactor is shut down, residual heat is removed, and the radioactive inventory is confined.

The basic design concept, with its principles of redundancy, diversity, physical separation of redundant sub-systems, and safety-oriented system behaviour in the event that sub-systems or parts of the plant malfunction, ensures that the safety systems necessary to provide the fundamental safety functions for compliance with the protection goals remain available. The particularly consistent application of the mentioned principles in German nuclear power plants contributes substantially to the robustness of our plants.

Defence in depth level 4: Prevention and mitigation of the effects of extremely rare conditions (risk minimisation) against which the plant must be designed (defence level 4a) or of conditions beyond the design basis (defence levels 4b and 4c).

In the EU stress tests – irrespective of the extensive precautions at the preceding defence in depth levels and frequency of occurrence – events are postulated that must be placed at defence in depth level 4 so that the effectiveness of emergency measures beyond the existing robust design can be studied. For events with an assumed failure of protective and safety equipment, additional emergency measures are provided. The aim of these measures is to prevent damage to the core (mainly through measures to ensure adequate core cooling) and, in the event this is unsuccessful, to limit as much as possible the release of radioactive materials into the environment (for example ensuring containment integrity through filtered pressure relief).

The result of this multiple layering of measures to maintain the barriers is that failures at one level can be contained in principle at the next DID level. In this sense, this defence-in-depth safety concept is a “fault-tolerant safety concept” that, as consistently implemented in Germany, contributes substantially to the robustness of our plants.

Consequences of the basic design concept

The assessment of the robustness of the German nuclear power plants, and accordingly of their capabilities for coping with situations beyond the design basis, must take into account that due to the basic design concept the German plants show a considerably low frequency of events exceeding the plant’s design basis.

As the German Reactor Safety Commission (RSK) states in its comment of 16 May 2011, for example, the consequences of a tsunami at the Fukushima Daiichi site obviously received inadequate consideration when a decision was made regarding the protection required for units 1 to 4. Given the tsunamis that had already occurred in the Pacific region and the frequency of occurrence to be deduced from them, it should have been expected that a tidal wave might occur that would exceed the design basis of the Fukushima nuclear power plant. Knowledge of this sort would have been considered in the licensing and/or supervising process in Germany and would have resulted in associated requirements for the plants. Even this naturally-caused impact upon the site would therefore have been placed within the design basis range and would not have produced harsh consequences if it occurred.

In light of this, the assessment of the robustness of the German nuclear power plants must include adequate consideration of the basic design concept before margins in the range beyond the design basis are assessed.

Further developments in Germany

The in-depth development of the safety concept in Germany since the beginning of the 1970s is characterised by an approach that may be expressed as follows:

Despite the potential ability to control at the next defence level events that lead to failures, the attempt should be made to avoid them or to control them as early as possible

at the multiple defence in depth levels; i.e. the following principal prevails wherever possible: **avoid damage instead of mitigating damage which has occurred.**

This has resulted in applications of the defence-in-depth safety concept that minimise the probability of serious malfunctions and contribute considerably to the robustness of the nuclear power plants in Germany.

Although events at defence in depth levels 1 and 2 (normal operation and abnormal operation) are not relevant to the studies associated with the EU stress test, it should be noted that measures implemented at those levels improve deviation control and thereby result in more effective accident avoidance (and greater availability). A substantial contribution to robustness is made by, for example, the leak-before-break concept, the integrity concept for steam generator tubes (for pressurised water reactors), in-service inspection and maintenance or continuous monitoring of safety relevant control valve actuators.

Something that should be emphasised in particular is the additional level between the operational instrumentation and control system and the reactor protection system: that of the limitation system. This is provided to initiate corrective actions, in the event of deviations from normal operation, before the reactor protection system limits are reached. Actions by the limiting system have a higher priority than control system and manual actions. Limitation has an accident-preventing effect so that operational malfunctions do not escalate to accidents.

Below, two aspects that are relevant to an assessment of the robustness of existing safety systems for accident control (defence levels 3 and 4a) are explained in greater depth, as they are of importance for the events postulated in the EU stress test.

1. Protection and optimisation of safety systems

In accordance with the concept of multiple levels of measures, functional separation of operational systems and safety systems has been consistently implemented.

This has made it easier

- to align the safety systems more specifically to accident control applications and to optimise them for accident control. The safety system is controlled through the multi-train (usually four-train) reactor protection system, which ensures that the operating crew has at least 30 minutes before manual actions must be taken;
- to concentrate the safety-relevant systems in buildings that are especially protected and in addition are uncoupled from other systems areas that are not required for accident control and in which secondary damage that interferes with their function may occur in the event of accidents.

In this way, functional impairment of safety systems as a result of potential secondary damage in accidents becomes less likely.

2. Design against internal events potentially effecting more than one redundant system

The concept for controlling failures across active safety systems consists mainly of spatial separation of redundant sub-systems and associated structural protection. Internal events such as fire, internal flooding, or mechanical impacts (such as, for example, jet forces, projectiles) therefore remain generally limited to one redundancy. The safety systems typically have a four-train design (4 x 50%; for the majority of postulated scenarios the design can be regarded as 4 x 100%).

Apart from these protective measures, which concern the safety systems, there are other measures that prevent events or limit their consequences with a potential for effecting more than one redundant system. These are mainly passive measures that are realised through building design (for example design of all safety-relevant buildings for design basis earthquakes).

There are, finally, special active systems that can be used to avoid and control events with a potential for effecting more than one redundant system (for example fire detection and fire suppression systems).

Events with a potential for effecting more than one redundant system therefore do not result in the loss of a safety function even in the event of a postulated, simultaneously occurring single failure.

Since the late 1980s, further measures and systems have been developed with which effects of severe events can be minimised, e.g. cooling of the reactor core can be restored, even after the hypothetical loss of an entire safety system or of multiple systems that perform a safety function together (defence in depth levels 4b and 4c). These include preventive measures for restoring the power supply and heat removal, including the use of mobile systems located on-site, to avoid serious damage to the core or to fuel elements in the spent fuel pool.

Furthermore, the following mitigative measures have been backfitted for a core meltdown postulated to occur in spite of all other measures taken:

- Installation of passive hydrogen recombiners within the reactor containment of pressurised water reactors. They are able to remove enough hydrogen gas generated in a core damage scenario that hydrogen explosions, and the hazard they pose to the reactor containment, can be avoided. In the case of boiling water reactors, the same objective has been achieved through inertisation, i.e. by means of an oxygen-free atmosphere in the reactor containment.
- Installation of a filtered venting system for the reactor containment through which gases can be released from the reactor containment so that failure of the reactor containment from excessive pressure is prevented while as much of the radioactive material as possible is kept confined or retained.

In summary, the nuclear power plants in Germany, by virtue of the extensive protection already inherent in the design of the safety systems, are able to control a wide range of unlikely events without resorting to emergency measures. With the emergency measures that are available in addition, even very unlikely events can be controlled without significant impact to the environment.

1.1.2.2 Description of the systems for the conduction of the main safety functions

In the following the main design characteristics and safety functions of the nuclear power plants in Germany are described. To prevent unnecessary repeating, the description is performed by three examples for different construction lines:

- For the PWRs the Konvoi plant Emsland (KKE) has been chosen as a representative NPP. Differences compared to other PWR plants are mentioned at the related description of the safety systems.

- The BWR construction line 72 is represented by the twin unit Gundremmingen (KRB) and
- the BWR construction line 69 is represented by the Krümmel plant (KKK). Differences to other BWR-69 plants are also described in the text.

A complete description of the safety functions of any plant is provided in the licensees' reports which are available on the web-pages of the licensees, however, these descriptions are in German. The links to the web-pages are included in Annex 1.

A more detailed description of the particular systems in each plant is also given in the technical chapters 2 to 6 as far as these systems are important for the related technical issue.

A: Description of main safety functions of German PWRs by the example of Emsland NPP (KKE)

The following description focuses on main operational and safety systems of German PWRs with the Emsland NPP (Konvoi-design) as an example. Differences at other German PWRs are indicated.

The description is based on the operator's representation which has been supplemented with additional information about the other German PWRs.

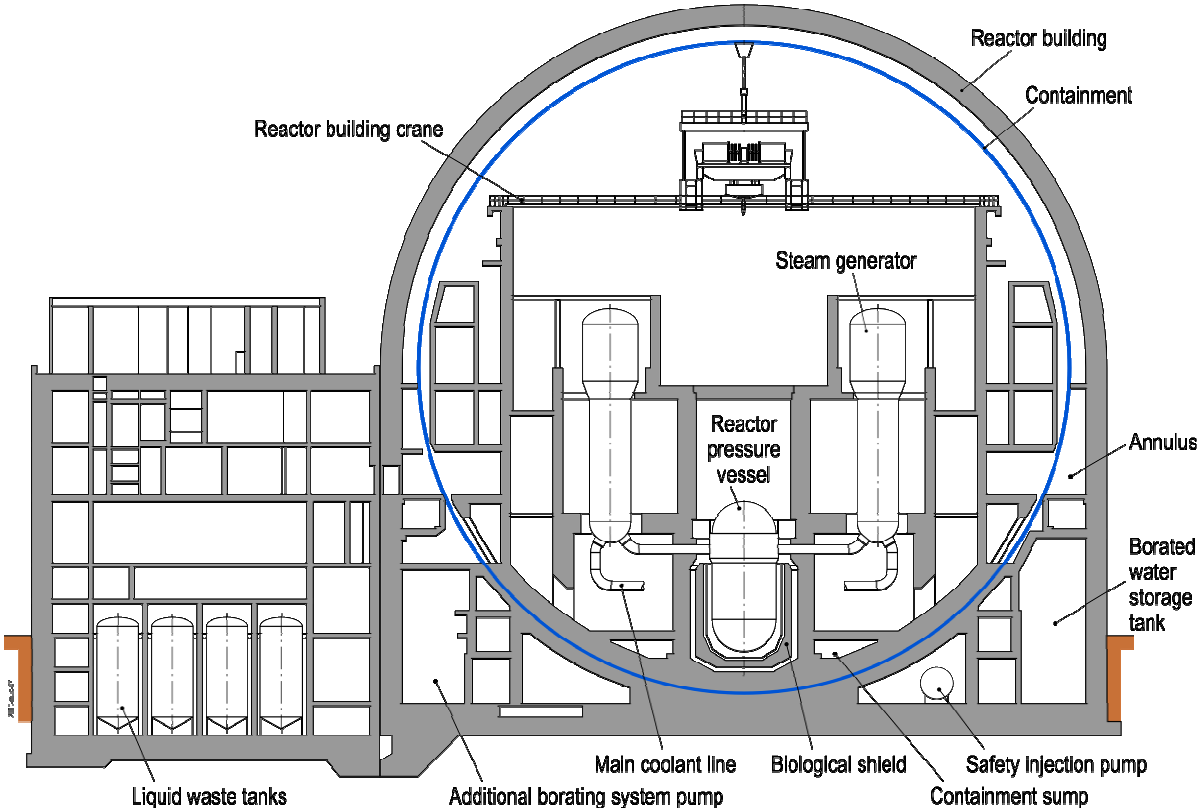

Figure 1-1: Cross-section of a PWR

- **Brief description of Emsland NPP**

Primary side

The primary side basically consists of the **reactor coolant system** which is divided into the components reactor system and reactor coolant system (RCS).

The **reactor system** basically consists of the reactor pressure vessel (RPV) and its internals, in particular the reactor core, and is used to generate the thermal capacity of the nuclear power plant. The core in the reactor pressure vessel is the nuclear heat source of the nuclear power plant. It contains 193 fuel assemblies with fuel rods, control elements and core instrumentation, and is flown through by the coolant which, in addition, serves as a moderator. The reactor coolant system consists of four identical

circuits, each with a steam generator, a reactor coolant pump and the connecting pipe system, as well as the pressurizing system with pressurizer relief and safety valve.

During power operation, the **reactor coolant system** ensures sufficient cooling of the reactor core and fulfils the task of transporting energy from the nuclear to the conventional area of the nuclear power plant.

As coolant, demineralised and degassed water is used which is mixed with boric acid, depending on power and burnup, to control the reactivity of the reactor core. The coolant flows from the reactor pressure vessel through the so-called hot legs of the main coolant lines into the steam generators, there it transfers heat to the secondary circuit and is returned to the reactor pressure vessel through the reactor coolant pumps via the cold leg of the main coolant

The pressurising system is connected to the hot leg of one of the four cooling circuits. It serves to maintain and limit the pressure in the reactor coolant system and to compensate for volume changes of the main coolant.

All components of the reactor system and the reactor coolant system are installed inside the containment in the reactor building.

Plant-specific characteristics

All German PWRs have 4 reactor coolant circuits with the exemption of GKN-I which has 3 loops. Obrigheim is not included here because the plant is in decommissioning state and treated only as site with a spent fuel pool.

Secondary side

On the secondary side, electrical energy is generated in the turbine generator set by the steam produced in the steam generators. The steam is condensed in the condenser and the condensate is pumped into the feedwater tank through low-pressure feedwater heating strings. From the feedwater tank, the condensate is returned by the feedwater pumps to the steam generators as feedwater through high-pressure heater strings.

The main components of the secondary side are

- the main steam systems,
- the turbine generator set and the condensers
- the condensate and feedwater system.

The **main steam system** has the task to transfer the saturated steam generated in the steam generators in four lines via the main steam and feedwater valve room to the turbine generator set located in the turbine building.

The safety installations of the secondary circuit (Figure 1-2) are located, physically separated, in the main steam and feedwater valve rooms. In the case of a postulated

damage to a steam generator tube, the corresponding steam generator will be isolated towards the main steam and feedwater side. Each of the four main steam lines has a valve compact block, consisting of main steam isolation valve, main steam relief isolation valve, main steam safety isolation valve and main steam safety valve. The main steam relief isolation valve is followed by a main steam relief control valve that is not integrated in the valve block. The main steam isolation valve has the task to isolate the main steam line towards the turbine building in the case of incidents. The main steam relief control valve and the main steam safety valve have the task to limit the pressure in the main steam system in the case of design basis accidents or to reduce it in a controlled manner, and to serve as a heat sink. In the main steam and feedwater valve room, there are also the feedwater valve combinations, physically separated, that are assigned to the four steam generators.

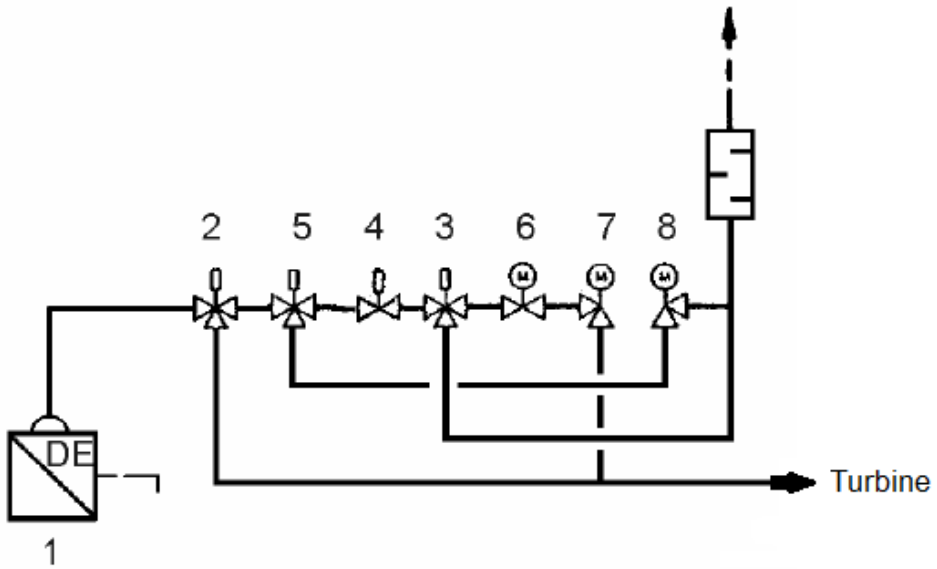

1 Steam generator
2 Main steam isolation valve
3 Main steam safety valve
4 Main steam safety isolation valve
5 Main steam relief isolation valve
6 Warm-up isolation valve
7 Warm-up control valve
8 Main steam relief control valve

Figure 1-2: Safety installations of the secondary circuit

The **turbine generator set** consists of a high-pressure saturated steam turbine part, two parallel low-pressure turbine parts, and a coupled generator. In the saturated steam turbine part, the main steam expands and is then routed to low-pressure turbines via the water separator/reheater. In both low-pressure turbine parts, the steam is expanded to condenser pressure and directed into the condenser where it is condensed and collected in the hot wells.

The **generator** in the Emsland nuclear power plant is a 4-pole turbo generator. It is operated with a nominal speed of 1500 min-1 and has a nominal capacity of 1,640 MVA. The generator has a directly water-cooled rotor and stator winding. The cooling water is supplied by a shaft pump directly coupled to the turbine shaft in a closed circuit. The laminations in the generator stator are cooled through a separate cooling circuit with hydrogen.

The **condensate and feedwater system** has the task of returning the water condensed in the hot wells of the condensers to the steam generators via feedwater heat-

ing strings and the feedwater tank and thereby increasing pressure, temperature and energy content accordingly. It basically consists of the main condensate pumps, the two low-pressure feedwater heating strings, the feedwater tank, the feedwater pumps and the two high-pressure feedwater heating strings.

The task of the main cooling water system is to remove the condensation heat generated by condensation of the turbine steam.

The three main cooling water pumps located in the circulating water structure convey the main cooling water from the cooling tower to the two turbine condensers. The system removes the heat absorbed by the cooling water in the condensers to the atmosphere via a cooling tower. The water evaporating in the cooling tower amounts to 950 kg/s approximately. The evaporation in the cooling tower results in a certain thickening of the dissolved particles in the cooling water.

To prevent corrosion and deposits, a part of the circulating cooling water is therefore removed by discharge into the river Ems. To replace the water evaporated in the cooling tower and the amount discharged, the river water treated in the cooling tower makeup water treatment plant and is applied to the cooling circuit.

Plant-specific characteristics

All the other German PWRs have corresponding safety installations of the secondary circuit. However, the older units (GKN-I, KKG, KWB-A/B) have different constructive solutions.

Reactor auxiliary systems

The **reactor auxiliary systems** are located in the containment, in the reactor building annulus and in the reactor auxiliary building. The main reactor auxiliary systems, particularly those important to safety, are described briefly below:

Volume control system

The main operating functions of the volume control system are to continuously remove primary coolant during power operation, to transfer it to the coolant degassing and purification system, and to return it to the primary circuit after addition of boric acid and demineralised water to generate the boron concentration required there. In addition, the volume control system compensates the temperature-induced density changes and thus volume changes of the main coolant. It serves also for seal water for the main coolant pumps.

Coolant treatment

The coolant treatment has the task of separating the coolant resulting from start-up, load changes, burnup compensation and from the component drain system into demineralised water and boric acid and to increase boric acid concentration to 4%. The uptake and storage of the coolant is performed by the coolant storage system.

Exhaust system

The exhaust system has the task of limiting the hydrogen and oxygen content in the flushed components and to retain the radioactive gases contained in the exhaust gas until their radioactivity has largely decayed. In addition, it prevents the escape of radioactive gases by retaining of subatmospheric pressure in the flushed components.

Nuclear ventilation system

The nuclear ventilation systems have the following safety-related tasks:

- Adherence of defined subatmospheric pressures and directed air flows to avoid undue spread of radioactive elements possibly contained in the atmosphere to prevent their uncontrolled release.
- Reduction of radioactivity possibly contained in the atmosphere, either by filtration or recirculated air or through air exchange, if necessary with retention of the radioactive elements by exhaust air filtering.
- Removal of partial mass flows from different exhaust air lines to measure the air activity.
- Adherence of defined atmospheric conditions while dissipating heat losses to ensure the operation of safety-relevant installations.
- Ventilation isolation of the containment after a loss of coolant accident in the containment.

The main operating functions are

- the supply of outside air to the buildings, and
- adherence of defined atmospheric conditions while dissipating heat losses to ensure the operation of various units (adherence of the permissible ambient temperature) and to create favourable ambient conditions for the operating staff.

- **Reactor control systems**

There are two independent **reactor control systems**

- the control elements with drive system, and
- the volume control system with boric acid and demineralised water supply.

<u>Control elements with drive system</u>

The control elements with drive system have both operational and safety related tasks:

61 control elements, with 24 control rods each, are used for power control of the reactor core and the shutdown of the reactor.

<u>Volume control system</u>

The volume control system is mainly an operational system but it has also the following safety-related tasks to fulfill:

- If required, pressure reduction in the primary circuit under loss of offsite power conditions.
- Support of power reduction in the case of steam generator tube rupture.
- Support of pressure reduction in the case of steam generator tube rupture

Power reduction is carried out by injecting boron into the reactor coolant system and pressure reduction by spraying coolant into the pressurizer.

Plant-specific characteristics

Other older German PWRs, e.g. GKN-I (45 control elements) and KWB-A (69 control elements), have a different number of control elements as well as different numbers of control rods per control element.

- **Safety systems**

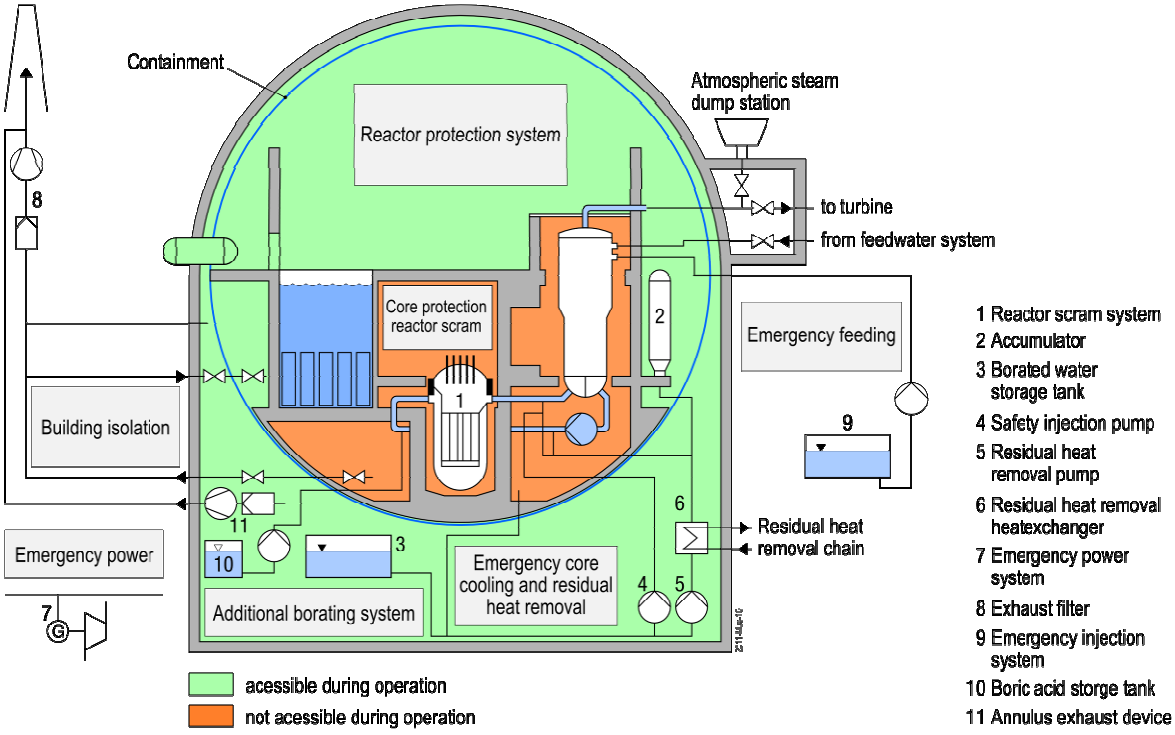

Figure 1-3: Schematic drawing of the safety systems of a PWR

The design of the safety systems basically comprises of four trains (4 x 50%). A multi-level emergency system with 4 x 10 kV emergency diesel generators and 4 x 380 V emergency diesel generators is installed for the management of design basis accidents.

- **Shutdown systems**

Each German Konvoi-unit has two independent reactor shutdown systems:

– The reactor trip system and

– the extra borating system.

Reactor trip system

For reactor scram, the control elements are dropped into the reactor core by their own weight due to gravity. This is ensured through the safe de-excitation of all drive coils by interruption of different voltage levels.

Extra borating system

The extra borating system belongs to the safety system and must be available to manage the following challenges:

– In the case of design basis accidents due to "external hazards", the extra borating system instead of the volume control system compensates normal operational leakages out of the borated water storage tanks while a pressure of 150 bar is kept in the reactor coolant system. This task is fulfilled automatically, i.e. without manual intervention, for a period of at least 10 hours.

– In the case of steam generator tube ruptures with activity transfer to the main steam side, the power is reduced by control elements in combination with the extra borating system through injection out of the extra boric acid storage tanks and pressure reduction in the reactor coolant system is supported by spraying out of the borated water storage tanks into the steam cushion of the pressurizer.

– When reaching the lowest limit of the control rod movement limitation (Steuerstabfahrbegrenzung - STAFAB), the shutdown margin of the control rods is preserved by borating the main coolant out of the extra boric acid storage tanks.

– For the case that the volume control system or the boric acid and demineralised water supply are not available, the reactor is shut down by the combination of control elements / extra borating system and subcriticality is reached for a xenon-free condition.

– After anticipated transients without scram (ATWS), the reactor can be brought into and kept in a long-term subcritical condition by injecting boric acid out of the extra boric acid storage tanks.

During pressure test of the reactor coolant system, the required test pressure is applied and kept by the extra borating system.

Plant-specific characteristics

The older German units GKN-I, KWB-A/B and KKU have no extra borating system. At the units GKN-I and KWB-A and B the task of the extra borating system is achieved by the volume control system, at KKU this is done by a two-train leakage make-up system.

- **Safety cooling systems**

The safety cooling systems consist of the following systems:

- Residual heat removal system / spent fuel pool cooling system
- Safety components cooling system
- Essential service water system for secured systems
- Emergency feedwater system

The first three systems are part of the residual heat removal chain.

Residual heat removal system

The residual heat removal system has the task to remove residual heat after the shutdown of the reactor both in case of normal shutdown, and in case of design basis accidents if heat transfer through the steam generator is no longer appropriate or no longer possible.

In case of any plant-internal design basis accidents, the residual heat removal system has the task to limit the extent of damage by core flooding, emergency core cooling and decay heat removal. The decay heat removal is carried out in combination with the safety components cooling system and the essential service water system, which together with the residual heat removal system and the spent fuel pool cooling system form the so called residual heat removal chain (see below).

The residual heat removal system is designed to control all leak sizes from a small leak to the design basis accident (2-A-break of a main coolant line) with regard to the residual heat removal.

The residual heat removal system consists of four independent, physically separated trains with emergency power backup that are assigned to the four loops of the reactor coolant system.

Each train consists of a high-pressure injection system, an accumulator injection system and a low-pressure residual heat removal system.

The safety related task of the **high-pressure injection system** is to ensure, in the case of a loss of coolant accident, the addition of borated water to the coolant inventory if the pressure has dropped below 110 bar. Each of the four trains basically consists of a safety injection pump which, at the suction side, is connected with a borated water storage and, at the pressure side, allows injection into the reactor coolant system via the hot or cold leg.

The **accumulator injection system** has the task of contributing, in particular after loss of coolant accidents with large fracture sections, to a fast refilling of the reactor pressure vessel. It has a total of eight accumulators with a water volume of 34 m^3 each and a nitrogen blanket, which pressurises the water with a gauge pressure of 25 bar. Inside the containment, each train has two accumulators that are connected to the "cold" or "hot" feed line through which injection into the reactor coolant system takes place

automatically in case of demand due to the nitrogen pressure imposed without any additional actions from the reactor protection system.

In the case of a loss of coolant accident, the **low-pressure residual heat removal systems** (and low-pressure injection systems) continue flooding of the reactor coolant system following the phase of refill through the accumulator injection system by the start of the residual heat removal pumps. In case of a LOCA the 4-train system is started automatically by the reactor protection system if the primary system pressure falls below about 10 bar and transfers borated water from the borated water storage tanks into the reactor coolant system. After drainage of the borated water storage tanks, the extraction line is switched to the containment sump. Coolers downstream the residual heat removal pumps ensure the long-term residual heat removal.

Plant-specific characteristics

The characteristics of pre-Konvoi plants (construction line 3) are very similar to Konvoi plants (e.g. number of safety trains, protection of buildings).

At some non-Konvoi-plants there are differences with respect to number and capacity of the accumulators.

Spent fuel pool cooling system

The spent fuel pool cooling system has the task of cooling the spent fuel pool for all conditions of normal operation and design basis accidents. For this purpose in two of the four trains of the residual heat removal system a spent fuel cooling pump is integrated. In case of external hazards these two lines of the spent fuel pool cooling system can also be used for residual heat removal from the reactor. In addition, a 3rd train for spent fuel pool cooling is installed, which is independent from the residual heat removal system.

Plant-specific characteristics

Older German PWRs (e.g. GKN-I, KWB-A/B) have corresponding spent fuel pool cooling systems with different systems engineering features.

Intermediate cooling systems

The intermediate cooling system can be subdivided in the **component cooling system**, which is part of the residual heat removal chain, and the **secured closed cooling system**.

The task of the component cooling system / secured closed cooling system is to remove the heat generated at the (nuclear) cooling points in the controlled area of the reactor plant / from the emergency diesel generators and refrigerating units to the essentialservice water system for each normal operating condition and design basis accidents. The component cooling system additionally serves as an activity barrier.

Both subsystems have four redundant trains.

Plant-specific characteristics

All German PWRs are equipped with intermediate cooling systems. However, there are different systems engineering features.

Essential service water system

The task of the essential service water system is to remove heat from the nuclear closed cooling water heat exchangers (of the component cooling system) and the secured closed cooling water heat exchangers (of the secured closed cooling system) to the heat sink (river or ambient air). Due to its safety significance, the essential service water system is designed with four redundancies. Each of the four subsystems basically consists of:

- the cell cooler, each consisting of two fans, water distribution system, cooling installations and drip tray through which the absorbed heat is discharged into the atmosphere,
- the essential service water pump to which the water re-cooled in the cell coolers flows from the cooling tower basin, and
- the flow line and the return pipe.

In the event of external hazards, such as aircraft crash with destruction of the switchgear building, two of the four service water supply trains are fed as part of the emergency RHR chain by two emergency essential service water pumps each so that removal of residual heat will also be ensured in this case.

Plant-specific characteristics

There are different system engineering features in the German plants (e.g. regarding cell coolers). For plant-specific features see section 5.2.

Residual heat removal chain

The low-pressure residual heat removal system, the component cooling system and the essential service water system together form the so called residual heat removal chain (RHRC). Here, a distinction is made between the normal RHRC (4 trains) and the emergency RHRC (2 trains).

The main active components of the normal RHRC are the low-pressure residual heat removal pumps, the component cooling pumps, the essential service water pumps and the fans for the forced cooling of the cell coolers. The energy supply of these components is provided by the emergency power system D1 (10 kV), which is protected against like earthquake and flooding, but not against aircraft crashes. In case of any design basis accident including earthquakes residual heat removal is via this chain.

The active components of the emergency RHRC, however, are two trains of the spent fuel pool cooling pumps which can also be used for residual heat removal from the primary circuit, the emergency component cooling pumps and the emergency essential service water pumps. This cooling chain is protected against man made and natural external hazards such aircraft crash with destruction of the switchgear building. Conse-

quently the energy supply of the emergency RHCR is via the additional emergency power system D2 (380 kV) which is also protected against man made and natural external hazards.

Plant-specific characteristics

As regards the emergency RHRC some older German PWRs have different systems engineering solutions.

For a detailed description of the emergency power supply systems including plant-specific differences see also section 5.1.

Emergency feed water system

The emergency feed water system has only safety related tasks and no operational tasks to fulfil. This 4-train system is protected against man made and natural external hazards and serves to ensure supply to the steam generators:

- in case of system-immanent failures of the feedwater-steam cycle (e.g. feedwater line break),
- in case of a loss of coolant accident with small leak in the reactor coolant system and unavailability of the normal feedwater supply,
- in case of accidents due to external hazards with impact on the plant during power operation.

In these cases, the energy in the fuel assemblies released after reactor shutdown and, in addition, the energy stored in the reactor coolant system components is discharged through the steam generators.

The electrical supply for the active components of this system is provided by the emergency diesel generators (emergency power system D2) if a failure results in the loss of the station power supply, the offsite power supply and the emergency diesel generators (emergency power system D1).

Plant-specific characteristics

Al German PWRs have corresponding emergency feedwater systems with differing systems engineering features (e.g. KKU, GKN-I, KWB-A/B).

For a detailed description of the emergency power supply systems including plant-specific differences see also section 5.1.

- **Reactor protection system and limitations**

Limitations

In the hierarchy of I&C systems, the measures related to limitations lie between the optimal areas of the operating control installations and the limits for the actuation of the reactor protection system.

The limitations have the tasks,

- as operational limitation, to increase plant availability through appropriate continuous safety actions,
- as limitating process variables, to limit the process variables such that the initial values on which the accident analyses are based, will not be exceeded,
- as protective limitation, to return, in case of deviations, the process variables to such values that allow continuation of specified normal operation.

The limitation systems have the following objectives:

- Limitation of the values for reactor power and power density to permissible values that are below the response levels of the reactor protection system.
- reduction of reactor power in case of imbalances between the power generated in the reactor and the power discharged through the steam generators,
- limitation of coolant pressure, coolant mass and coolant temperature gradient to permissible values,
- ensuring shutdown reactivity of the control rods by limiting the depth of insertion,
- ensuring subcriticality of the shut down reactor by limiting the addition of demineralised water,
- monitoring of reactor shutdown by controlling drop down of the control rods after reactor scrams.

For this purpose, process variables in the plant are recorded, processed, linked and compared with limits. When limits are exceeded, they trigger commands that act on control rods or actuators such that at limiting process variable is returned to its permissible value (protective limitation), or that the monitored measure is performed (limitation of process variables). Regarding their response levels and actuation signals, the limitations precede the measures of the reactor protection system.

The safety-relevant limitation systems are designed redundantly. The logical analysis (2 of 4) of the processed signals results in a high degree of actuation reliability and protection against false tripping.

Plant-specific characteristics

Limitations are a common safety related feature of German NPPs. The particular design can be different among the units.

Reactor protection system

The purpose of the reactor protection system is to identify design basis accidents and to initiate appropriate measures. It will, e.g., be actuated if one of the above mentioned limitation measures fails or in case of design basis accidents.

The reactor protection system is that part of the safety system which protects the plant against undue loads for the design basis accidents to be considered and keeps their impact on the operating staff, the plant and the environment within the specified limits.

To achieve this, it is required to identify the various design basis accidents in time and to initiate appropriate accident management measures.

For compliance with the fundamental safety functions, the reactor protection system must provide reactor protection actuation signals in a timely manner that enable the selected active safety measures to ensure the protection goal oriented functions.

The function of the system is divided into excitation level, logic level and control level. By means of analogue data acquisition, DBA-specific process variables are collected that produce actuation signals via logic circuits when reaching certain limits. The actuation signals initiate protective measures and, via the priority level and the switchgear, trigger the active safety measures that are necessary for the management of the individual design basis accident.

The reactor protection system is basically self-checking in some areas. The areas of the reactor protection system that are not self-checking are checked by in-service inspections performed at intervals of four weeks.

The reactor protection system is divided into an unsecured area in the switchgear building (designed against earthquakes, but not against aircraft crash/explosion pressure wave) and a secured area in the emergency feedwater building (designed against earthquakes and aircraft crash/explosion pressure wave).

Plant-specific characteristics

Older units such as KKU, GKN-I and KWB-A and B have a different design of the secured areas of the reactor protection system.

- **Containment system**

The containment system of the Konvoi-units consists of the containment and the shield building surrounding it.

The containment provides a barrier against the release of radioactive substances. It consists of a spherical steel vessel with a diameter of 56 m and a wall thickness of 38 mm and is designed against pressures and temperatures occurring during a design basis accidents. The lower spherical part rests on a concrete foundation; apart from that, the containment is self-supported. The containment contains the entire reactor coolant system which is under operating pressure, the spent fuel pool and parts of the directly connecting safety systems and reactor auxiliary systems. The containment is the third barrier for compliance with the protection objective "limitation of activity re-

lease". During operation, the containment is continuously ventilated and accessible so that inspections, preparatory work for inspections or fuel handling take place during plant operation.

The shield building, which consists of a hemispherical dome and a cylindrical base, surrounds the containment and the annulus of the reactor building. The shield building has a thickness of 1.8 m and rests on a foundation. It protects the containment against external hazards, such as aircraft crash and explosion pressure waves. The area between the lower cylindrical part of the shield building and the containment forms the annulus where parts of the safety systems are assigned redundantly, and where parts of the reactor auxiliary and supporting systems are located. Air ventilation systems exist which guarantees a sub-pressure inside the annulus even in case of an accident.

Plant-specific characteristics

There are differences with respect to diameter and thickness of the containment vessel and the thickness of the shield building.

- **Electrical power supply**

The operational part of the electrical power supply consists of the 400 kV main grid connection, the 110 kV standby grid connection and the station power system. For safety related tasks there are two independent emergency diesel-back-up power supply systems (D1 and D2).

The 400 kV main grid connection serves for the transmission of the energy generated to the grid as well as for the station power supply from the grid at opened generator circuit breaker. Station power can also be supplied by the generator if the 400 kV main grid connection is not available during plant operation.

Besides the station power supply by the generator or the grid connection, there is also a 110 kV standby grid connection available to supply the auxiliary electrical system if the generator and the 400 kV main grid connection are not available. Switch-over to the standby grid connection is performed automatically if there is low voltage or low frequency in the 10 KV busbars of the station power substations. The power needed for cooling down the nuclear power plant with the main heat sink available can also be obtained from the standby grid connection.

The switchgears of the station power system are divided into four trains in line with the process-based structure of the plant. Each train consist essentially of one 10 kV, 660 V and one 380 V main distribution. Also, there is a battery-buffered 220 V direct-current system for the supply of the control rod drives. The station power systems supply the operationally required electrical consumers without safety significance.

The emergency power supply systems (D1 and D2) including the connection to the station power system are part of the safety system and ensure the supply of the consumers that are essential for the safety of the nuclear power plant. Like the safety systems, the switchgears of the emergency power supply system are therefore also divided into four trains. Their protection against failure-initiating events and against external hazards as well as the redundant design of the emergency power supply system corre-

sponds to the protection and redundancy of the process-based systems supplied by the emergency power supply system.

The emergency power system is divided into two individual emergency power systems (D1 and D2) that supply the 10 kV (D1), 660 V (D1) and 380 V (D1 and D2) alternating-current voltage levels as well as the 220 V (D1) and 48 V (D1 and D2) direct-current voltage levels.

Plant-specific characteristics

For a detailed description of the emergency power supply systems including plant-specific differences see also section 5.1.

- **Spent fuel pool**

The spent fuel pool is located inside the containment. Its layout with regard to the reactor well is such that the refuelling machine can operate above and serve both the fuel pool and the reactor well.

The spent fuel pool is filled with borated water having the boron concentration that is needed for refuelling. The coolant serves for the shielding of the radioactive radiation from the spent fuel assemblies and contaminated core components (e.g. control assemblies and flow restrictor assemblies) and for the cooling of the fuel assemblies.

The water level above the fuel assemblies in the pool is so high that the radiation exposure on the edge of the fuel pool is kept below the permissible limits, i.e. it is so low that persons can stay on the edge of the pool even during the transport of fuel assemblies. The coolant level is indicated in the control room. If the level is too low, this will be signalled and monitored.

Underwater floodlights and tools are available for carrying out work under water.

The walls and floor are made of reinforced concrete. On the walls, a substructure of austenitic steel profiles is introduced into the concrete. These steel profiles are arranged grid-like and divide the walls into rectangular areas. On this lattice, austenitic steel plates are welded as waterproof liner. In the concrete of the pool floor, a lattice of bottom girders is arranged. As on the walls, austenitic steel plates serving as waterproof lining and supporting bolts are welded to this floor lattice.

Any possible leakage is removed via the system for the detection of leakages in the wall and floor areas and made up by coolant from the boric-acid and demineralised-water injection system. The damage location can be localised under water and sealed by underwater repair.

Subcriticality is ensured in normal operation already by the distances and the absorber channels of the storage racks with different B-10 content alone, in postulated accidents with consideration of the boration of the spent fuel pool water. Criticality-safety is demonstrated within the framework of the safety demonstrations.

The spent fuel pool is connected with the reactor well / setdown area and the shipping cask pool by refuelling hatch frames through which the fuel assemblies are transported under water into the RPV or into the shipping cask pool. The shaft upstream of the set-down area is sealed off by a hatch during reactor operation, and its leaktightness is monitored by means of a leakage monitoring system. The shaft upstream of the shipping cask pool can also be sealed off by a hatch if necessary.

The reactor well above the reactor is sealed off leak-tight from the reactor cavity below. The setdown area for the core structure is an extension of the reactor well. When inserting the hatch in the hatch frame between the two rooms, the water level in the reactor well can be lowered, while the set-down core structure remains flooded and shielded.

Decay heat removal from the spent fuel pool is ensured via the two-train spent fuel pool cooling system or via the additional independent 3rd train.

- **Accident management measures**

In the event of multiple failures of safety systems, accident management measures serve for taking the plant back to a safe operation state so that the fundamental safety functions are achieved. They can be divided into measures for damage prevention and damage mitigation.

Preventive accident management measures

All measures that will lead to the ability to remove the decay heat of the fuel assemblies are considered as measures to prevent fuel damage. Essential parameters in this context are an available heat sink as well as a sufficient coolant inventory in the reactor pressure vessel and in the spent fuel pool.

Secondary bleed & feed

In the event of a complete loss of all operational and safety-related systems used for steam generator feeding the accident management measure for depressurising the steam generators and injecting into the depressurised steam generators has to be performed with priority. This is done with the aim to initiate substitute feeding by means of the feedwater tank inventory and/or of a mobile pump . By this way, sufficient cooling is ensured through heat removal via the atmospheric steam dump stations.

Primary bleed & feed

To ensure a sufficient coolant inventory in case of a high pressure scenario, primary system pressure has to be reduced by opening the pressuriser relief and safety valves to such an extent that the emergency cooling systems can refill the primary system. The water inventories provided for this purpose have such a high boron content that subcriticality remains ensured.

Both measures can be carried out as long as there is battery supply available. The secondary bleed & feed can still be carried out by manual measures even if the battery-power supply has been lost.

Mitigative accident management measures

Upon the postulated failure of the preventive measures described above, mitigative measures for protecting the containment integrity and to limit the radioactive releases take effect, consisting mainly of the passive catalytic recombiners for hydrogen depletion and of containment venting and filtering of the venting flow. These measures will still be effective even if fuel damage or a failure of the reactor pressure vessel should already have occurred.

Passive autocatalytic recombiners

The release of hydrogen into the containment is detected by the active hydrogen monitoring and limitation system and high hydrogen concentrations are limited by mixing and recombination. An essential measure is constituted by the installation of passively working autocatalytic hydrogen recombiners in the containment that limit the hydrogen concentration to an extent that global combustions challenging the containment integrity are prevented. In the long term, if all oxygen is consumed, the hydrogen concentration may rise if hydrogen sources exist (e.g. molten core concrete interaction).

Filtered containment venting

The aim of the filtered containment venting is to limit the pressure increase in the containment and by this prevent a loss of containment integrity due to a long term pressure increase and an associated large release of activity before the failure pressure is reached (cliff edge effect). The pressure increase in the containment is limited by a controlled release of gases through the system and at the same time a minimisation of the radiological consequences for the environment. Along the pressure relief path, retaining devices (typically venturi scrubbers and/or metal fibre filters) are installed to separate aerosols (degree of separation ≥ 99.99 %) and iodine (degree of separation for elementary iodine ≥ 99.0 % and for organic iodine ≥ 90 %). Filtered venting can still be carried out even if the AC-power supply has been lost. As well a manual operation of the system is possible.

Containment sampling system

The task of the sampling system is to sample the containment atmosphere after beyond design accidents with postulated core melt scenarios. The sampling is performed such that highly radioactive samples taken from the containment atmosphere/sump are diluted in sampling modules to manageable activities. Concepts of sampling systems include equipment for sampling from the containment atmosphere, and equipment for sampling from the containment sump.

Further accident management measures

Since the spent fuel pool is located inside the containment the above-mentioned measures for hydrogen-limitation and for the retention of radioactive materials in the containment are effective. To ensure heat removal and subcriticality in the spent fuel pool, further accident management measures are additionally available that are concentrated mainly on the injection of coolant. Owing to the large amount of water in the spent fuel pool, there are considerable grace periods in this respect.

Taking into account the instrumentation that can be used and its accident-proof availability, the detection of beyond-design-basis faults is safely ensured. Due to the many established on-call and alarm duties, sufficient numbers of action forces are available at any time. All relevant activities can be performed from appropriately shielded room areas so that it can be assumed that they can be safely carried out even if dose rates are increased.

Additional measures are considered as part of the preparation of a manual for mitigative accident management (SAMG).

B: Description of main safety functions of German BWR-72 by the example of Gundremmingen NPP (KRB)

The two-unit nuclear power plant KRB - II is equipped with two BWRs of identical design of the construction line 72 and consists of a number of single building elements which, with due regard to the spatial separation of the redundancies, optimised lines, cross-free routing and good accessibility, are built each around the reactor building as a central building. The buildings are: the auxiliary building, the nuclear services building, the turbine buildings, the switchgear buildings, the circulating water structures and the emergency diesel buildings.

Basic operational and safety systems, as well as structural installations are briefly described in the following. The describing is especially focused on safety related installations. The description refers to one reactor unit and represents the original design conditions. The safety system and the main control room are separated for each unit and are independent from each other.

- **Brief description of Gundremmingen NPP**

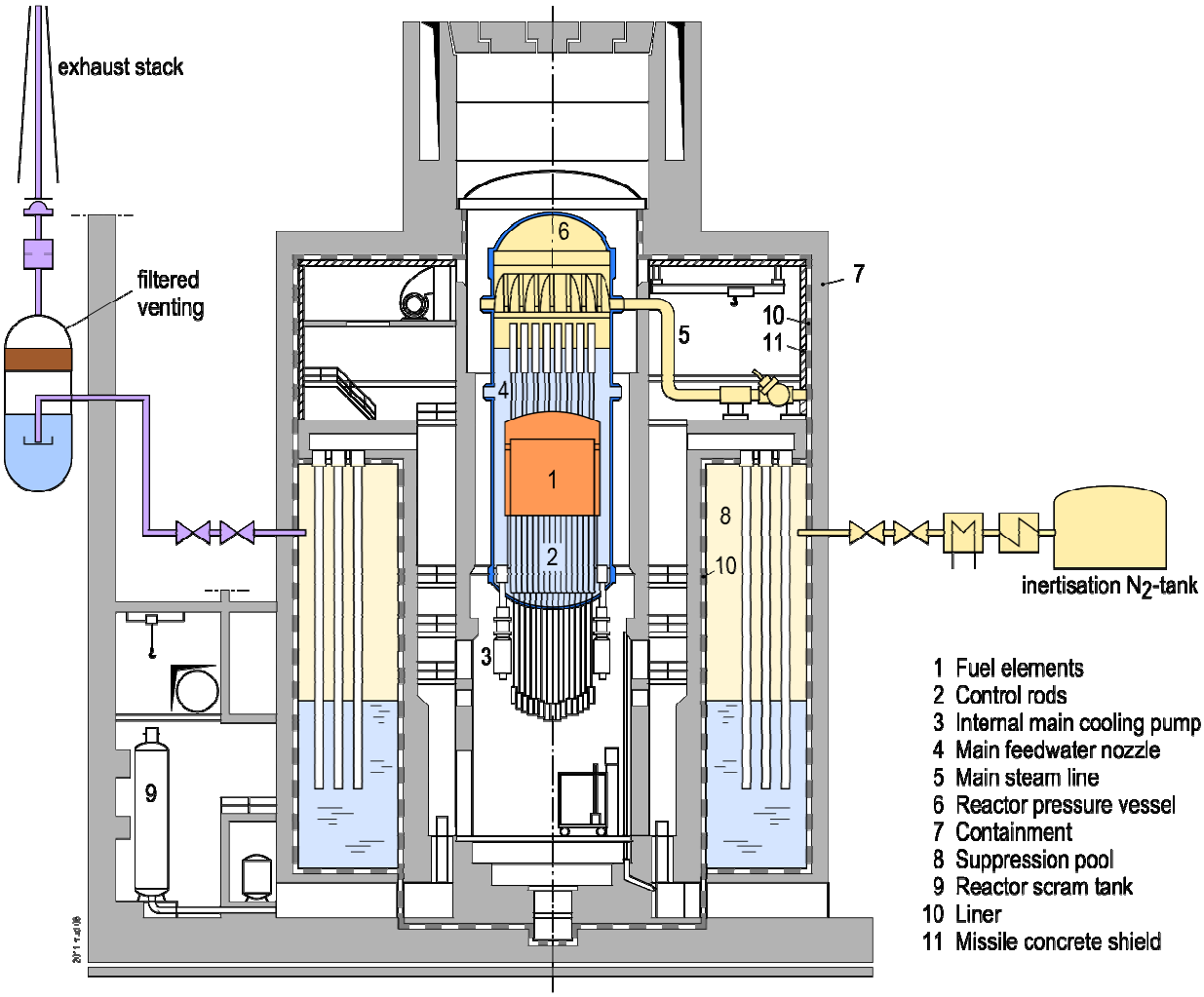

Figure 1-4: Cross section of BWR 72 containment (reactor building is not shown)

Reactor pressure vessel

The reactor pressure vessel consists of steel, is approx. 23 m high, has an inside diameter of approx. 6.2 m and a thickness of approx. 170 mm in the cylindrical part; the thickness of the cover is approx. 95 mm and of the bottom calotte approx. 235 mm. The weight of the reactor pressure vessel is approx. 770 t.

Reactor core

The reactor core consists of 784 fuel elements. The nuclear fuel is bounded in ceramic fuel pellets (fist barrier) and enclosed gasproof in approx. 4 m long fuel-rod cladding (second barrier). The fuel rods are arranged in square forming the fuel assemblies. The cladding material and the fuel element channel for the flow control consist of zirconium alloys. Between each four fuel assemblies there is one of the 193 fuel-rods. The fuel-rods have a cross-shaped section and are filled with neutron absorbing material. The fuel-rods serve for the reactor power control and for the shutdown of the reactor.

Together with the control-rods and the in-core instrumentation the fuel assemblies form the reactor core in the reactor pressure vessel and are fixed in a core structure. The outer enclosure of the core structure, the core shroud, is cylinder-shaped, its outside diameter is approx. 1.6 m smaller than the inside diameter of the reactor pressure vessel. Thus, an annular gap exists where eight axial-flow pumps circulating the light-water, which is used as coolant and moderator, are located.

Reactor coolant pressure boundary

The coolant inventory is enclosed in the reactor pressure vessel and in the associated piping of the reactor coolant pressure boundary. The reactor coolant pressure boundary can reliably be isolated from the connected piping and serves as a third barrier for enclosure of activity inventory of the reactor core.

Basic functional principle

The basic functional principle of Gundremmingen NPP is as follows: Slightly subcooled water is pumped by the feed pumps via four inlet nozzles into the reactor pressure vessel. In the annular gap it flows down between the core shroud and the reactor pressure vessel, and is circulated by the axial-flow pumps through the reactor core. There, the water is heated from 215 °C to 286 °C. The coolant flow rate in the reactor core is approx. 52,000 m^3/h. The reactor cooling is designed such that a critical boiling condition will not occur and during all postulated accidents a sufficient cooling of the reactor core is also ensured. While flowing through the reactor core approx. 14 % of the water evaporates. The resulting main steam escapes via the exit nozzles at a pressure of 70.6 bar and a temperature of 286 °C, after being freed from water and residual moisture in the moisture separator and steam dryer. The main stream flow is 7,500 t/h in total thus corresponding to 3,840 MWth.

The conversion of steam takes place in the saturated-steam turbine which consists of a double-flow high-pressure element and two double-flow low-pressure elements. For reduction of the wetness of steam and for improving the efficiency of the system a mechanical drainage and reheating are performed between the high-pressure element and the low-pressure element.

A three-phase generator (four poles) is directly connected with the turbine and produces an effective power of approx. 1,344 MW at a voltage of 27kV.

The condensation of the exhaust steam from the turbine occurs in two surface condensers. The accumulating condensate flows into a collection tank; from where it is forwarded by condensate pumps via the low-pressure preheater into the feedwater tank. With the help of the feedwater pumps the feedwater is injected via the high-pressure preheater into the reactor pressure vessel. The main steam which can possibly not be used by the turbine can directly be discharged via the turbine bypass system into the condenser.

Heat removal from the turbine condenser occurs via the main cooling water system. In this system approx. 160,000 m^3/h cooling water are circulated by the 3 x 33 % main cooling water pumps between the secondary side of the condenser and a natural-draft cooling tower, assigned to each unit. The capacity of the main cooling water system is approx. 40,000 m^3 per unit. The caused water losses of approx. 2 m^3/s are compensated by treated water from the Danube river.

- **Reactor control systems**

The control of the reactor power is performed by changing the coolant flow and by insertion of the control-rods. The insertion of each control-rod is electric motor-driven and is manoeuvrable either individually or in groups. Additionally, each fuel-rod can be inserted via a hydraulic drive within approx. 3 sec in case of a reactor scram.

With the help of the variable-speed coolant recirculation pumps the reactor power can be changed by a maximum of 40 % (60-100%) without manoeuvring the control-rods. Major changes require the insertion of the control-rods, which are also required for the burn-up compensation, for the xenon/samarium poisoning compensation, and for ensuring the subcriticality of the reactor after plant shutdown.

- **Containment concept**

The containment-concept of Gundremmingen NPP consists of the internally located separate containment vessel (primary containment) and the outside shield building or containment building (secondary containment). Both buildings are based on a common foundation plate with a diameter of 52 m and thickness of 3 m

The containment vessel consists of pre-stressed concrete cylinder with an outer diameter of 30 m. The inner surface of which is covered with a gasproof steel shell. Inside the containment there are the reactor pressure vessel and the pressure suppression system, which consists of the drywell and wetwell (suppression pool). The wetwell has a water pool with approx. 3,000 m^3 deionised water, to condense the escaping steam during the loss-of-coolant accident considered in the design (double-ended rupture of the main coolant line, the so called 2A break), thus limiting the pressure within the containment and the load of this building. During events which lead to increased activity release in the containment, a direct sealing is ensured because of the piping, penetrating the containment, is equipped at least with two isolation valves, where one of these is arranged inside and the other outside the containment, unless it is not conflicting with safety related reasons (e.g. reactor scram). Thus the containment serves as an activity

barrier for safe enclosure of radioactive material, which is also efficient during events with leakages from the reactor coolant pressure boundary.

The secondary containment (containment building) consists of ferro-concrete with an outside diameter of 50 m and a thickness of 1.8 m and encloses the containment. It serves first of all as an additional shielding of the surrounding area against ionising radiation, furthermore it protects against external events caused by natural events like e.g. earthquakes and flood, as well as aircraft crash, fire, explosion blast wave and acts of sabotage. Additionally, the secondary containment serves for retention of potential leakages from the containment so that these are controlled via the subatmospheric pressure holding system and released through suspended solids filter and activated carbon filter to the vent stack.

The spent fuel pool is located in the secondary containment above the containment (see Figure 1-5). The containment head has to be removed for fuel loading.

- **I&C systems and control rooms**

All I&C systems for instrumentation and monitoring of the reactor, of necessary reactor auxiliary, of the feed-water/steam cycle, for the station power supply and the generator are operated from the main control room. According to their safety related importance, the I&C systems are assigned to different I&C levels (e.g. operation control, limitation systems and reactor protection) and are designed mostly redundant.

Furthermore, for process monitoring there are local auxiliary control consoles from which important single and group alarms are transferred to the main control room. The main control room is shielded such that the operation can be maintained after occurrence of a design basis accident. For accidents with failure of the **main control room** there are in addition two redundant **remote shutdown stations** in the containment building which are protected against external events.

All relevant safety-related components of the reactor, the control, instrumentation and monitoring systems are based on the principle of redundancy and diversity, and are separated physically. They are connected to the also redundant emergency power supply system.

- **Safety systems**

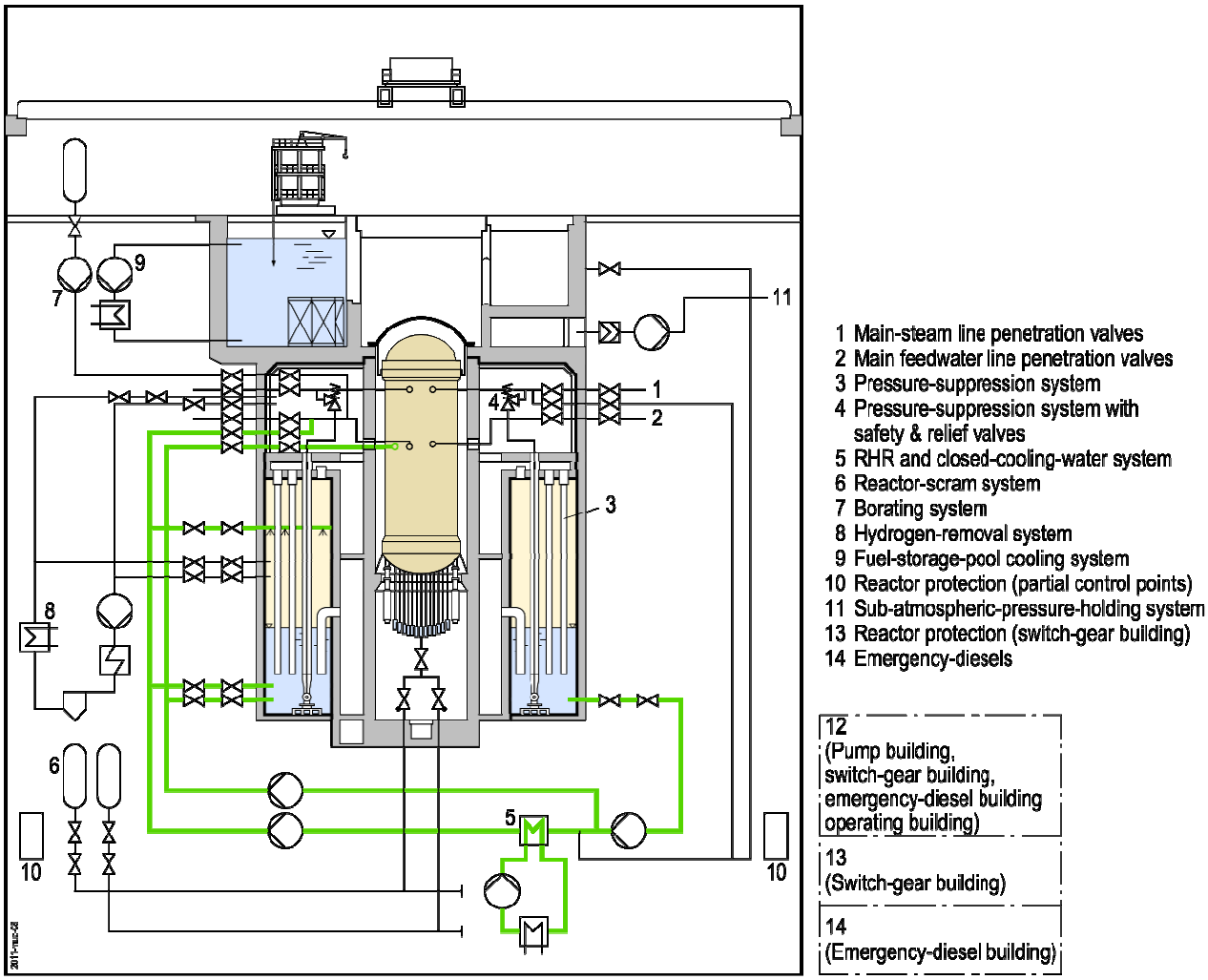

Figure 1-5: Safety systems of a BWR-72

Figure 1-5 gives an overview of the safety systems of a BWR 72 and shows the location of the spent fuel pool. The scram systems, the emergency cooling and residual heat removal system, the pressure limitation and pressure suppression system, the spent fuel pool cooling system, the heating, ventilation, air-conditioning systems and systems for activity retention, the station power supply and emergency power supply, the instrumentation and control, as well as the reactor protection are of particular safety-related importance for the NPP KBR II.

Scram systems

Each unit of the NPP KRB II has two independent scram systems and a liquid poison system as accident management measure in case of severe accidents.

Hydraulic and electromechanical scram system

For reactor scram, apart from the electric motor drive for each of the 193 control rods, there is also a diverse hydraulic drive system which does not require an active energy

supply. The redundant main components like e.g. the scram accumulator tank, the tank lines and instruments are located between the containment and containment building enclosure in two separated installation spaces. The supply of the 193 control-rod drives with pressurised water occurs via two hydraulically separate water ring lines, each supplied by three scram accumulators, individual capacity of each is 50%, i.e. regarding the shutdown capacity there is a degree of redundancy of 6 x 50 %. The two of the water ring lines of the reactor scram system and the lines of the hydraulic control rod drives are located inside the containment in the control rod handling room and are decoupled from each other.

If the hydraulic scram system does not work, each of the 193 control rods are driven in by separate electric motors within 120 s. It has been assessed, that this time is fast enough for all transients. The scram by electric motors is completely diverse to the hydraulic scram system except of the control rods itself. Each one third of the motors are supplied by separate batteries.

Liquid poison system

The liquid poison system as additional scram system is able to shutdown the reactor independently from the control-rods, when the primary circuit remains intact. The core will be maintained in a subcritical condition by injection of a boron solution as long as necessary. The degree of redundancy of the active components of the system is 2 x 100 %.

Emergency cooling and residual heat removal system

The emergency cooling and residual heat removal system of Gundremmingen NPP is schematically shown in Figure 1-6.

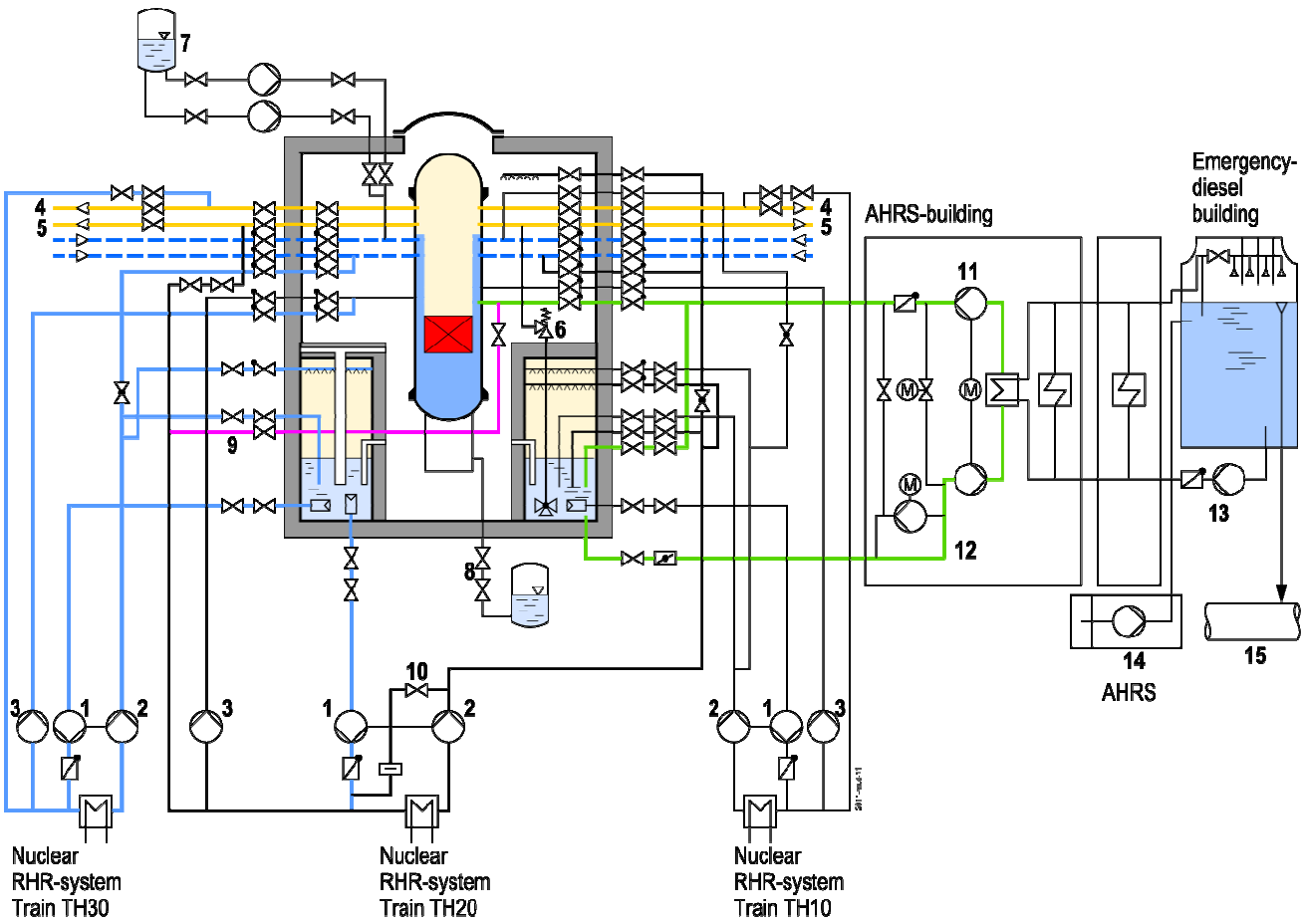

1 Pre-stage } LP-pump
2 LP-stage
3 HP-pump
4 Main-steam lines
5 Feedwater lines
6 Pressure-suppression system
7 Borating system
8 Reactor-scram system
9 Modified shutdown line
10 Minimum-flow bypass
11 Feed pump
12 Filling pump
13 Service-water pump
14 Additional water pump
15 Drain channel

Figure 1-6: Sketch of the emergency cooling and residual heat removal system of Gundremmingen NPP

The emergency cooling and residual heat removal system has the task to ensure the cooling of the fuel assemblies during normal shutdown operation and in case of any loss-of-coolant accidents. The emergency cooling and residual heat removal facilities consist of the redundant emergency cooling and residual heat removal system, the pressure suppression system and the containment venting.

The emergency cooling and residual heat removal systems discharge the decay heat from the reactor during plant shutdown and in case of accidents, and serve for injection of the coolant from the wetwell into the reactor pressure vessel in high-pressure and low-pressure range. Additionally, the systems serve for the cooling of the water inventory in the wetwell, the fuel storage pool, and the spraying of the drywell after loss-of-coolant accidents.

According to the original design conditions of KRB II the plant has three redundant emergency cooling and residual heat removal systems for each unit, with a degree of redundancy of 3 x 100 %.

Each of the emergency cooling and residual heat removal system, thus control the whole spectrum of possible reactor pressures, reactor temperatures, and break cross-sections in case of any loss-of-coolant accidents by discharging the decay heat reliably, is completely independently power and cooling water supplied, has independent I&C systems and is physically separated from the others. The emergency cooling and residual heat removal systems are connected to the emergency power supply and can be operated simultaneously without limitation. The three emergency cooling and residual heat removal systems are located in the annulus of the containment building, in physically separated, water proof isolated compartments, arranged at an offset of 120° each.

Spent fuel pool cooling system

The task of the spent fuel pool cooling system is to discharge the decay heat of the fuel assemblies in the spent fuel pool via an operational component cooling system. The degree of redundancy of the spent fuel pool cooling system is 2 x 100 %. If required, the threefold redundant emergency cooling and residual heat removal systems can also be applied for the spent fuel pool cooling.

Residual heat removal chain

According to the concept of the emergency cooling and residual heat removal system for each of the three residual heat removal systems there is an own cooling water supply with an (nuclear) intermediate cooling circuit system as an additional activity barrier and essential service water system. The operation of the emergency cooling and residual heat removal systems requires max. approx. 6 m^3/s of cooling water. By means of this coolant circuits assigned to each redundancy also the emergency diesel of the respective redundancy assigned to it are cooled. The required cooling water for the nuclear residual heat removal chain, the emergency diesel and room air cooler is provided from the Danube via the physically separated cooling water pump buildings assigned to each redundancy.

As already described above, the essential service water system required for the operation of the nuclear residual heat removal chain is directly assigned to the redundant residual heat removal chain. In addition there are operational essential service water systems covering their cooling water requirement also with water from the Danube. The supplied cooling loads are of subordinate (e.g. emergency diesel for the supply of loads with high importance of availability, refrigerating units, etc.) or of no safety-related significance (e.g. cooling water for the generator)

Additional independent Residual Heat Removal and high-pressure coolant injection System (AHRS)

KRB II was originally designed with three similar emergency cooling and residual heat removal trains. For considerable improvement of the reactor pressure vessel supply and the heat removal from the wetwell during common-cause failures, a forth redundancy taking due account to diversity and dissimilarity was installed for each unit (AHRS). The AHR system includes an own reactor pressure vessel train, a train for wetwell cooling and is designed against earthquake. The heat is released via an own multiple-cell cooling tower. The coolant inventory is dimensioned such that only after the autarchy time of approx. 10 hours additional coolant have to be injected due to evaporation loss. The necessary components and connections are available. The re-

quired amount is so small that it can also be provided with mobile equipment. The power supply of the components is completely stand-alone; in case of loss of offsite power the components are supplied via an own diverse emergency Diesel, triggered by a largely diverse reactor protection system. The AHR system also has an own control room.

Pressure suppression system (containment)

The pressure suppression system has the task to condensate the escaping steam in case of loss-of-coolant accidents, thus suppressing the pressure; furthermore it is considered as a passive part of the emergency cooling.

The pressure suppression system consists of the wetwell, the condensate pipes from the drywell into the wetwell, and the check valves between the wetwell and the drywell. Additionally, there are low-lying cross-over pipes through which the leak out water flows back from the drywell sump into the wetwell.

The water pool in the wetwell serves as the water supply for feeding the reactor pressure vessel for the emergency cooling and residual heat removal systems and as substitute heat sink in case of any loss-of-coolant accidents where the main heat sink is not available.

Pressure limitation and pressure suppression system (reactor)

The pressure limitation and pressure suppression system consists of eleven safety and relief valves connected via the relief lines to the main steam lines, and the exhaust pipes from the relief valves to the wetwell.

Heating, ventilation, air-conditioning systems and flue gas system

The heating, ventilation, air-conditioning systems and the flue gas system have the task to ensure the fresh air supply in the rooms of the reactor, the plant auxiliary systems and the turbine building, to retain the specified subatmospheric pressure and the air flow direction, to limit the room temperatures via respective cooling capacity to the maximum levels permitted, and to reduce the concentration of the arising radioactive substances in the rooms or to minimise their release into the environment by filtering the exhaust air.

In case of an accident with pressure or temperature increase in the containment the containment isolation is triggered and the emergency subatmospheric pressure system is started. This system has the task to retain the subatmospheric pressure in the containment building and to filter potential leaking from the containment vessel before discharge. The degree of redundancy of the plant regarding the ventilators is 3 x 100 %, and regarding the filter train it is 2 x 100 %.

Leakages from the containment at penetrations are exhausted by the leak-off system with a redundancy of 2 x 100 % and discharged back into the containment.

Leakages at seals of instruments are exhausted by the seal suction system with a degree of redundancy of 2 x 100 %, finally condensed, filtered and discharged.

The flue gas system has the task to remove the accumulating non-condensable gases from the primary cooling-air circuit, to recombine the radiolysis gases catalytically, to delay the fission gases sufficiently absorptive and to discharge them controlled via the 170 m high exhaust stack into the atmosphere.

In the single room groups the exhaust air is monitored continuously regarding the noble gas activity, and in accessible service compartments also regarding the aerosol activity. The emission of radioactive gases and aerosols is monitored by three independent measuring systems in the exhaust stack. In case of an inadmissible increase of activity corrective actions are taken (e.g. closure of the containment, closure of the flue gas system, or shut-down the plant).

Station power supply and emergency power supply

KRB II is a dual-unit-plant with four main grid connections (two per unit). For power supply of the main loads there are three emergency conductor rails and two availability emergency conductor rails per unit. In the event of a failure of the main grid connections and of the load rejection to station power supply all of the ten emergency conductor rails are supplied automatically via the standby grid connection. In the event that this supply is not available, too, all of the ten emergency conductor rails are supplied automatically via the emergency Diesel. Each unit has five emergency Diesel with 4.8 MW power each.

The emergency power supply of the 3 x 100 % redundancies has a train-wise, segregated and functionally independent layout. All redundancies are designed against external events, but only the redundancies 2 and 3 against earthquakes (The third redundancy which is designed against earthquake is the additional independent residual-heat removal and high-pressure coolant injection system (AHRS)).

The associated buildings are physically separated (emergency diesel building, essential water pump building) or designed against corresponding loads (containment building).

If required, cross connections between every emergency diesel and also every availability emergency diesel to every emergency conductor rails between the two units can be established manually as an accident management measure.

Reactor protection system

The reactor protection system operates independently and is superordinated to the above mentioned safety subsystems. If in a 2-of-3 selection circuit of the reactor protection system specified limits, derived from physical quantities of power, temperature and pressure are exceeded, a reactor scram is triggered by hydraulic insertion of the control rods into the reactor core, thus preventing endangerment of components. If required, further safety precautions are triggered simultaneously like e.g. containment isolation, emergency cooling and high-pressure coolant injection. For safety enhancement the reactor protection system is designed to be completely testable and mostly self-monitoring.

The reactor protection system is divided into three redundant, physically separated reactor protection subsystems 1, 2 and 3 for active measures and 4, 6 and 8 for fail-safe measures. Active measures are assigned to the redundancies 1, 2 and 3 which require

a power supply (e.g. actuation of the residual heat removal chains); the fail-safe measures are passive i.e. self-acting, functioning without external power or control (e.g. reactor scram or the steam line isolation of the main steam and feed-water lines).

Each process variable is 3-fold measured in each relevant redundancy and triggers the necessary measures via a 2 of 3 selection circuit.

According to the “30 minutes concept” the control of design basis accidents require no manual intervention in the safety system within 30 minutes after the onset of the accident.

Further safety related supporting systems and installations for controlling beyond design accidents

Despite the already reached high level of plant safety, further failures can be postulated which require safety-related supporting measures. By using the systems technology reserves of the safety subsystems and operating systems, and retrofitting of the systems for the plant internal emergency response, a safety concept is implemented in which measures and installations are allocated to different levels of defence (level of defence 1 to 4) providing a variety of measures for control beyond design accidents. The so called accident management measures together with organisational and administrative measures they present the plant-internal accident management. By means of periodical reviews the availability of these reserves is continuously reviewed and confirmed.

By initiating the accident management measures, in case of beyond design accident sequences, a long-term controllable plant condition can be reached. Thus, a further minimisation of the already low residual risk can be achieved.

These measures for further enhancement of the safety standards can be divided in two groups:

Measures by using the existing safety reserves

Thus, the safety-related value of the operating systems is acknowledged and can be used for safety enhancement.

Cross connection condensate and feed water systems

The cross connection between the condensate and the feed water systems enables the reactor pressure vessel feed, also with unavailable feed water and residual heat removal systems. Additionally, it is possible to refill the unavailable feed water system slowly and safely or to pressurise it.

Injection of river water

The spool-design connection to the primary system, between the essential service water and the residual-heat removal system, was fixed installed during the erection of KRB II. The Danube water can be injected via this line directly into the reactor pressure vessel, or can directly be fed into the containment in case of a loss-of-coolant accident.

Fire extinguisher connections

At different points of the fire extinguisher system connections are installed which enable flexible connections to different systems. Thus, the condensate storage tank and the reactor pressure vessel can directly be fed.

Introduction of an accident management manual

To be able to use all technical possibilities for safety enhancement, even under stress conditions, these are specified in writing in the accident management manual. The plant operating procedures for beyond design events are specified therein, which are practiced regularly.

Segregation of the high-pressure and low-pressure train of an emergency cooling and residual heat removal system

The high-pressure and low-pressure pumps of the emergency cooling and residual heat removal system each are cooled by an assigned closed cooling water system. There is an additional, separated cooling train for the high-pressure pump enabling the operation of the high-pressure pump even without the low-pressure or booster pump. Thus the availability of the high-pressure pump was improved, and the frequency of events with an inadmissible level lowering in the reactor pressure vessel was reduced.

Diverse pressure limitation system

To limit the pressure in the reactor pressure vessel, three smaller, electromotive controlled valves regarding diversity were installed parallel to the existing electromagnetically controlled safety and relief valves; these are actuated both operationally, and by the reactor protection system.

Installation of an indirect diverse reactor pressure vessel level measurement

The reactor pressure vessel level measurement is carried out indirectly via the flow supervision of the reactor coolant clean-up pumps. At an actual reactor fill level of < 12.15 m the reactor coolant clean-up pumps only steam is drawn in, this is accordingly indicated at the main control room enabling indirectly conclusions on the level in the reactor pressure vessel.

Diverse reactor pressure vessel level signalling “low level”

Due to a backfitting of three temperature measuring stacks in the reactor pressure vessel a diverse signal for reaching a low level of the coolant in the reactor pressure vessel is realised. Upon response of specified limits there is an automatically reactor scram carried out by separate instrumentation and control installations, a pressure relief is triggered and AHRS is actuated for core flooding. Thus, the failure of the reactor pressure vessel level measurement is controlled by totally independent initiated measures.

<u>Plant internal accident management</u>

- Positive pressurisation of the control room ventilation

To ensure the plant monitoring by the main control room personnel in case of core melting accidents, the radiation exposure is minimised by positive pressurisation and filtering of the inlet air.

– 20 kV underground cable

The power supply of the loads required for the accident management is additionally ensured by underground cable, the connection of which is physically separated from the main and standby grids. Thus, a simultaneous supply of any emergency conductor rail in each unit is possible.

– Filtered containment venting

The filtered containment venting serves for prevention of a containment overpressurisation failure by a discharge of medium from the containment wetwell atmosphere via a venturi scrubber into the environment through a separate pipe. To entirely avoid the containment venting, if possible, or to trigger it as late as possible (release reduction), the failure pressure of the pre-stressed concrete containment was verified by more detailed calculation methods.

Compared to an original design pressure of 3.3 bar-g it results in a hypothetical failure pressure of approx. 10 bar-g. The mechanical components and the connected systems were upgraded to this pressure.

– Inertisation of the wetwell

During core melting the zircon of the fuel-rod cladding and the canisters can react with the steam. The zircon oxidise, whereby hydrogen is released. To prevent the risk of hydrogen explosion processes which challenges the containment integrity, the wetwell is made inert with nitrogen (passive measure) during normal plant operation. This is possible since the wetwell is sealed hermetically during operation and is not accessible. The drywell cannot be inerted.

– Autocatalytic recombiners in the containment

The H_2 recombination system consists in total of 78 passively operating autocatalytic recombiners of differing sizes; it is fixed installed in the whole containment, in the drywell and the wetwell. The system has the task to transform hydrogen with atmospheric oxygen into steam during a beyond design accident with H_2 formation and release into the containment (e.g. due to core damage). The additionally installed combustible gas control system is classified as non-operable regarding control of beyond design accidents.

During normal operation, the H_2 recombination system has no detrimental effect on the plant. For installation of the recombiners, the support stability in case of earthquakes was considered. To ensure the operability, the reactivity of the catalytic material is regularly reviewed in the laboratory.

C: Description of main safety functions of German BWR-69 by the example of Krümmel NPP (KKK)

- **Brief description of the Krümmel NPP**

The Krümmel nuclear power plant (Krümmel NPP) is a product line 69 boiling water reactor constructed by Kraftwerk-Union. It has a thermal output of 3,690 MW and a gross electrical output of 1,402 MW.

The plant's nuclear commissioning took place in September 1983 (first criticality on 14 September 1983). The spent fuel pool is located outside the containment in the reactor building upper part, which is designed to withstand aircraft crashes and blast waves. All of the safety systems necessary to ensure that the fundamental safety functions are fulfilled are also designed to withstand these external hazards.

The components of the safety system are built in multiples (redundancy) to control postulated accidents. They are structurally, mechanically, and electrically separated from one another so that interactions between them are excluded, thereby fulfilling the principle of prevention of cascading events.

Plant-specific characteristics

Older German BWRs of construction line 69 (KKP-1, KKI-1 and KKB) have lower thermal and electrical output as described in Table 1-2 but the general design is similar.

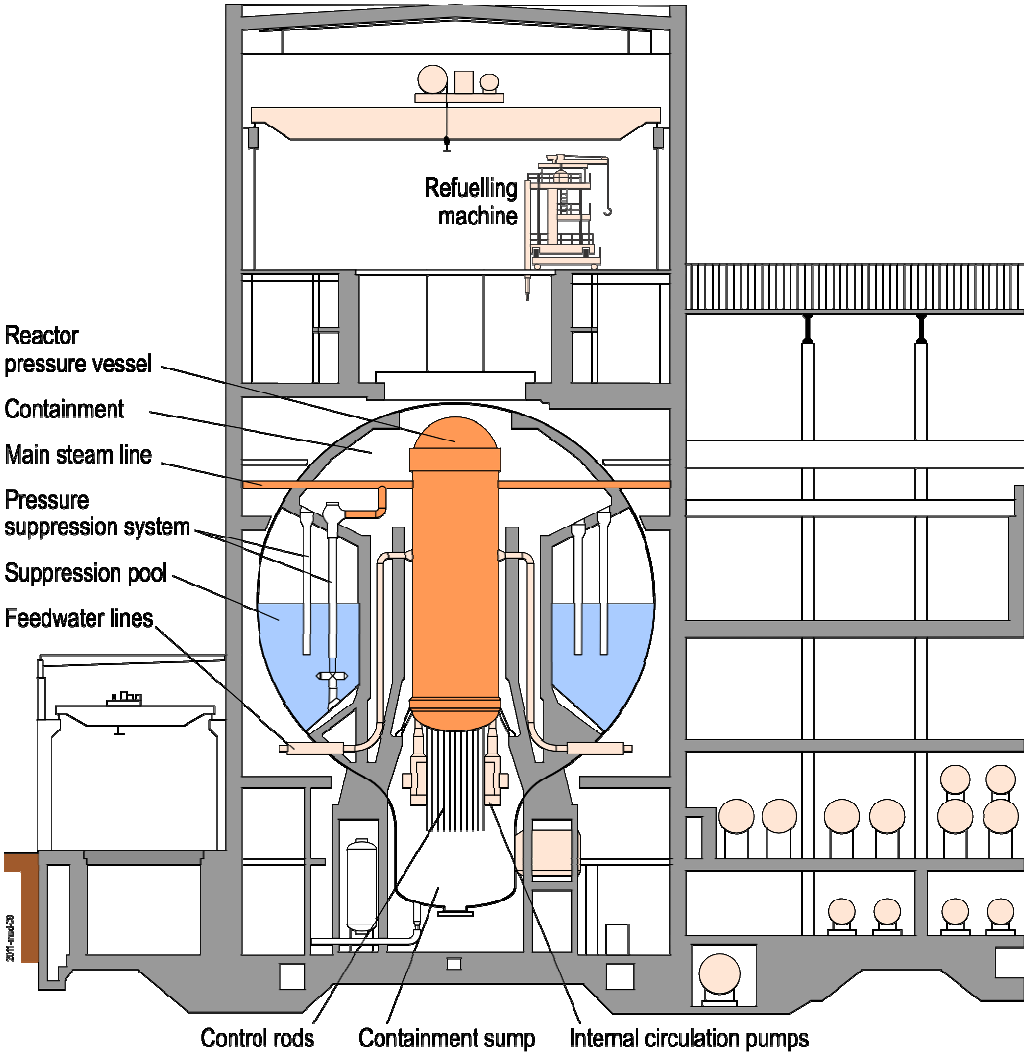

Figure 1-7: Cross section of a BWR 69

- **Brief description of Krümmel NPP**

<u>Building concept</u>

The reactor building was built of reinforced concrete and to withstand the loads from blast waves, earthquakes and aircraft crashes in accordance with the state of the art in science and technology (full protection). This building also contains the partial control unit TEST for operation and monitoring of the plant in case of specific external hazard events, as well as the electrical and I&C components of redundancy sections 5 and 6.

The turbine building is located directly adjacent to the reactor building. It has no safety-related tasks for the management of design basis accidents. However, it is designed to withstand the loads from pipe ruptures. In addition, the stability of the feedwater tank has been demonstrated for the safe shutdown earthquake. The switchgear building ZE contains the operational electrical and I&C installations, as well as the reactor protection system and the electrical and I&C installations of the safety system of redundancy sections 1 to 4. The emergency diesel generator buildings contain the four emergency diesel generators, which are assigned to four electrical redundancy sections of the switchgear building. The extra emergency diesel building contains two emergency die-

sel generators , which are assigned to the two redundancy sections of the TEST. The circulating water structure consists of two separated building sections, which contain the main cooling water pumps and the safety-related cooling water pumps to supply to the safety subsystems assigned to redundancy sections 1 to 4. Circulating water structure ZM5 contains the essential service water pumps for the safety subsystems assigned to redundancy sections 5 and 6.

There are, together with those connections for the fire extinguishing system, four water supply possibilities, distributed to the four sides of the turbine building/reactor building, for the performance of accident management measures. This way, supply to the emergency core cooling (ECC) and residual heat removal (RHR) system TH, the spent fuel pool cooling system TG, the seal water system TE, and the control rod flushing water system (RS) can be provided through the fire extinguishing system.

Plant-specific characteristics

The building concept of the older BWRs of construction line 69 (KKP-1, KKI-1 and KKB) may differ significantly, as far as this is of relevance it will be mentioned in the following technical chapters.

Water-steam cycle

The saturated steam generated in the reactor is transferred to the turbine generator set in the turbine building through four main steam lines. The water condensing in the three main condensers is transported into the feedwater tank via three main condensate pumps designed with 50 %. Three feedwater pumps, also designed with 50 %, transport the feedwater into the RPV. The low-pressure and high-pressure feedwater heating strings are located at the pressure side of the main condensate pumps and the feedwater pumps, respectively. In the reactor building, the safety-relevant system TH, TJ, TM and TW are integrated in the four feedwater lines outside the containment.

Plant-specific characteristics

The water steam cycle may have different technical solutions for the older BWRs of construction line 69.

- **Description of the main safety systems**

Emergency power supply

During normal operation, supply to the station power transformers takes place through the generator of the plant.

The Krümmel nuclear power plant has three grid connections:

- Main grid connection – 380-kV – connection to first grid
- Offsite supply connection – 110-kV – connection to second grid (buried)
- 10-kV third grid connection to the pumped storage plant (buried)

During normal operation, station power supply is provided through two station power transformers which supply to the 4 10-kV busbars of redundancy sections BA, BB, BC and BD. Downstream, there are the 660-V and 380-V power systems.

The plant has a 6-train emergency power system. Four of these emergency power supply redundancies are installed in the switchgear building with the voltage levels 10 kV, 660 V and 380 V, as well as 220-V and 24-V battery-buffered DC-power and 380-V battery-buffered AC-Power. These are functionally separated and, in addition to the supply via the station power supply busbars, in case of loss of offsite power, they are supplied train by train by dedicated emergency diesel generators. The corresponding emergency diesel generators 1-4 are assigned to these redundancies and are located in the emergency diesel generator buildings on the north side of the plant site. Spatially separated from the emergency power systems in the switchgear building, the emergency diesel generators (redundancies 5 and 6) are located in the extra emergency diesel building (south side of the plant site). The switchgear of these redundancies and the TEST are located inside the reactor building. The emergency power system of redundancies 5 and 6 is designed analogous to the emergency power system of the switchgear building.

Plant-specific characteristics

For a detailed description of the emergency power supply systems including plant-specific differences see also section 5.1.

Containment with pressure suppression system

The reactor pressure vessel (RPV) is surrounded by a pressure-tight and gas-tight containment. In case of design basis accidents, the pipes penetrating the containment will be isolated from the reactor protection system to the extent required (isolation). The large steam-carrying pipes are equipped with self-medium-operated isolation valves.

To prevent excessive pressure build-up in the containment during loss-of-coolant accidents, it has a passive pressure suppression system. It is located inside the containment and consists of a drywell and wetwell (suppression pool). During a loss-of-coolant accident inside the containment, the stream released flows through 72 vent pipes from the drywell into the water pool of the wetwell and condenses there.

The wetwell (water volume of 3,700 m^3) is used as an alternative heat sink in the case of loss of the main heat sink and absorbs the decay and system heat. It also serves as a water reservoir for the high-pressure and low-pressure systems that supply to the RPV.

Plant-specific characteristics

All German BWRs of construction line 69 have a comparable pressure suppression system with a different number of vent pipes and water volume.

Reactor scram

Krümmel NPP has two independent scram systems and one accident management system for scram (Liquid poison system).

Hydraulic and electromechanical scram system

The scram system YT is designed as a single-tank system for the 205 control rods, i.e. each control rod has a dedicated tank unit. In case of activation of the reactor scram system by the reactor protection system, the scram system has the task to rapidly insert the control rods into the reactor core, using hydraulic pressure, thus transferring the reactor core into a subcritical state within 3 seconds. It is designed according to the "fail safe" principle.

The electric-motor control rod drives also provide a process-based redundancy for hydraulic rapid insertion into the reactor core. These insert the control rod into the reactor core within 120 seconds.

Plant-specific characteristics

The reactor scram system of the other German BWRs of construction line 69 is comparable to the scram system of Gundremmingen with a different number of collection tanks.

Liquid poison system

In case of a beyond design basis accident with failure of hydraulic rapid insertion and electric-motor-driven insertion of the control rods, subcriticality of the reactor can also be achieved by the injection of boric acid solution. The liquid poison system TW has two redundant emergency-power-supplied piston pumps for injection of boric acid solution independent of the RPV pressure.**RPV pressure limitation and automatic pressure relief**

In order to prevent an overpressure failure of the RPV, the four trains of the main steam system, include a total of 11 self-medium-operated safety and pressure relief valves that subsequently open in the event of pressure transients and discharge the steam into the wetwell.

Five of these valves will be opened inside the containment in the event of a loss-of-coolant accident (automatic pressure relief ADE 1). If a valve of the ADE 1 fails to open, a dedicated reserve valve (ADE 2) will automatically be opened. Below 10 bar in the RPV, a total of 10 valves will be opened and hydraulically be kept open so that RPV feeding is ensured through the low-pressure systems TK and TH.

In order to ensure RPV pressure limitation for a postulated beyond design failure of all safety and pressure relief valves (common-mode failure), the relief lines of the main steam line also have five electric-motor-operated valves of the diverse reactor pressure limitation.

The strategy for accidents with loss of coolant or insufficient RPV feeding basically consists of transferring the plant into the low-pressure path through automatic RPV pressure relief (ADE) and ensuring sufficient core cooling with the 4-times redundant low-pressure injection systems.

Plant-specific characteristics

The other German BWRs of construction line 69 have comparable RPV pressure limitation and automatic pressure relief systems. However there are differences with respect to the number safety and pressure relief valves and the electric-motor-operated valves.

Residual heat removal and emergency core cooling systems

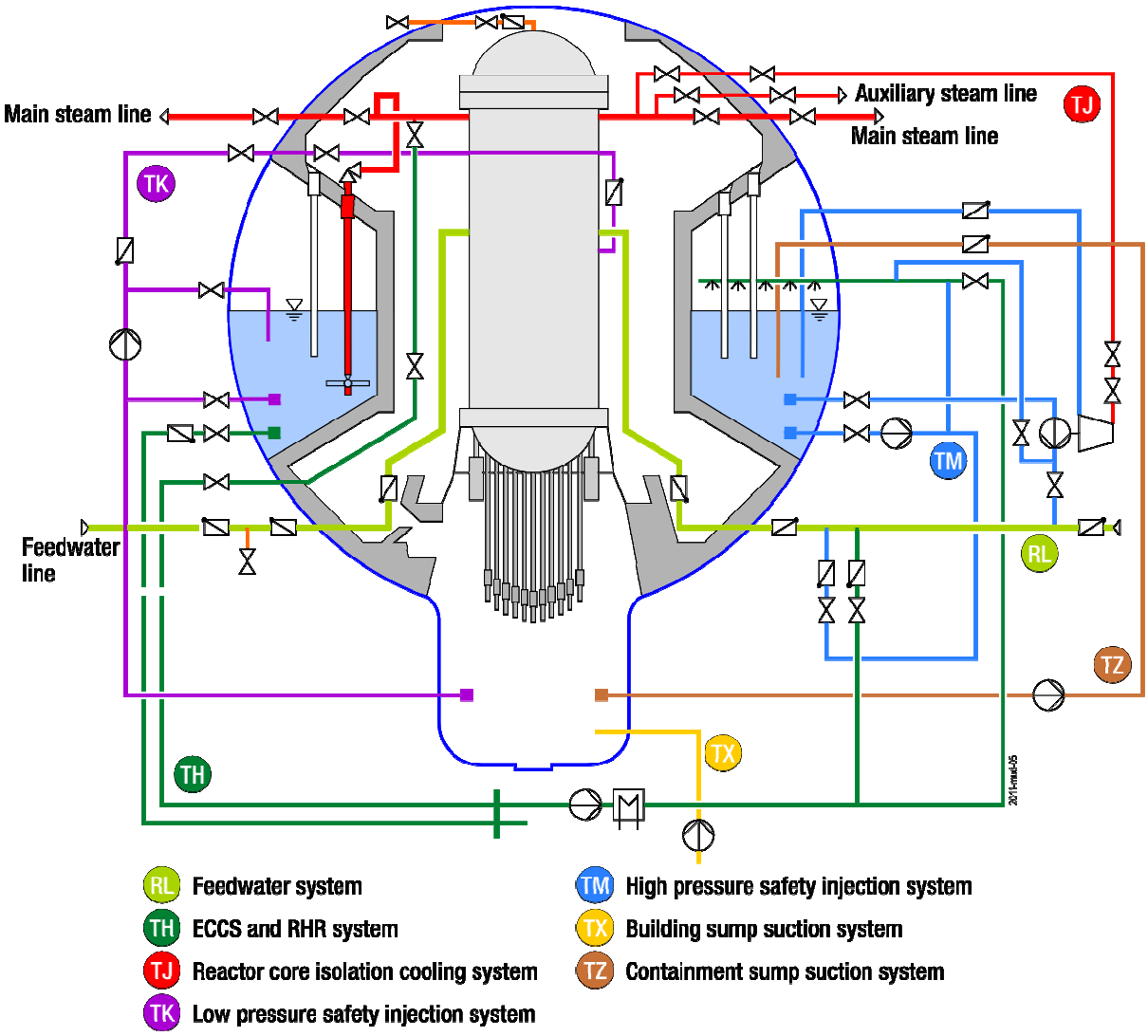

Figure 1-8: Residual heat removal and emergency core cooling systems

High-pressure injection systems

For RPV feeding in the high-pressure path, the two high-pressure injection systems TM and TJ are available as shown in Figure 1-8.

The electric-motor-operated high-pressure (HP) injection system TM serves to keep the level in the RPV within acceptable limits in case of accidents without loss of coolant where no feedwater supply is available. Residual heat removal and pressurization is performed by cyclic opening of the safety and pressure relief valves.

The high-pressure reactor core isolation cooling system TJ is another diverse system for supply in the high-pressure path. The injection system basically consists of an HP centrifugal pump that is driven by a reactor-steam-powered back-pressure turbine. The exhaust steam from the turbine condenses in the wetwell. The feed pump delivers water from the wetwell into the RPV through two feedwater lines. Besides the battery supply for the control of the reactor core isolation cooling system TJ, no additional external power is needed to operate the system. It is therefore also available for RPV feeding in the event of a station blackout (SBO).

In case of unavailability of the HP injections (TM and TJ), the RPV is automatically transferred into the low-pressure path (ADE) by the reactor protection system, depending on the filling level, and RPV feeding takes place through the low-pressure injection system as a redundancy to HP injection.

Low-pressure systems

Emergency core cooling and residual heat removal system TH:

The 4-train ECC and RHR system TH has the task to ensure core cooling in the event of loss-of-coolant accidents. This implies, in particular, the following major tasks:

- RPV flooding (Phase 1 of emergency cooling) 4 x 100 %
- Residual heat removal from the wetwell (Phase 2 of emergency cooling) 4 x 50 %
- Supply to the system for keeping the safety and pressure relief valves open in case of reactor pressure < 10 bar with 2 x 100 %
- Drywell spraying 2 x 100 %.

Main operational task is the residual heat removal from the RPV during shutdown operation and shutdown plant state (shutdown cooling). In addition, two TH trains can be used for cooling of the spent fuel pool.

Plant-specific characteristics

The technical solution is plant-specific. In the other BWR s of construction line 69 the TH system can also be used in a sump suction function. In Krümmel this function can be solved by systems TK and TZ.

Low-pressure safety injection system TK:

The low-pressure injection system TK has the task of flooding the RPV during loss-of-coolant accidents and to keep it flooded during Phase 2 of emergency cooling, and to supply to the system for keeping open the safety and pressure relief valves if the reactor pressure falls below 10 bar as a redundancy to the two TH trains. It has one train and is an additional redundancy to the TH system for the function "RPV flooding".

Containment sump suction system TZ:

The containment sump suction system TZ serves for the return of the water from the containment sump into the wetwell in the event of a loss-of-coolant accident inside the

containment. It consists of 3 x 100 % trains. The core flooding system TK, which can be activated for return operation by automatic switch-over, gives the containment sump suction system TZ a degree of redundancy of 4 x 100 % with respect of its return function.

Plant-specific characteristics

All the other German BWRs of construction line 69 have no separate containment sump suction system. In those plants this task is achieved via the low-pressure emergency core cooling and residual heat removal system TH.

Building sump suction system TX:

In accidents involving the loss of water from the wetwell into the reactor building, the water can be pumped back from the reactor building sump into the containment sump with the help of the building sump suction system TX. This system consists of two independent and physically separated 100 % trains and is used if cooldown operation by means of a residual heat removal system train has not been started.

With the building return system TX it is furthermore possible to pump back the water from possible leakages from the spent fuel pool cooling system together with the containment sump suction system TZ and the ECC and RHR system TH.

Plant-specific characteristics

The technical solution is plant-specific for KKK (Krümmel) and KKP-1 (Philippsburg). All other BWR s of construction line 69 have no building sump suction system.

Plant-specific characteristics

With regard to the protection of the buildings of the older BWR of construction line 69 significant backup measures have been performed in KKB (Brunsbüttel) and KKP-1 (Philippsburg). In both plants an independent bunkered system has been build. In Brunsbüttel the system is called UNS (Unabhängiges Notstandssystem) and in Philippsburg USUS (Unabhängiges Sabotage- und Störfallschutzsystem).

Independent remote shutdown system (UNS)/KKB

The independent remote shutdown system (UNS) serves for the control of accidents in the event of external hazards and internal hazards affecting several redundant system trains.

With the introduction in 1985 of the UNS, it became possible to control all events affecting several parts of the plant and leading to a complete failure of the systems supplied from the switchgear building. Such events include e.g. a fire affecting several redundant system trains in the switchgear building, the flooding of both circulating-water-pump buildings etc. as well as an earthquake and a blast wave. As regards the crash of an aircraft onto the plant, the introduction of the UNS represents a reduction of the residual risk since owing to the physical separation, only a direct hit on the reactor building will be able to cause any damage that will be beyond the design basis.

In order to be able to continue operating the reactor plant safely in the event of a challenge, a clear physical separation of the UNS building from the remaining plant structures, such as the reactor building or the turbine building, was effected. The UNS building lies on the eastern side of the power plant premises at a distance of 100 m from the reactor building and is connected with the reactor building by a bunkered underground UNS connecting channel.

Although during the construction of the KKB plant, the safety-relevant buildings (reactor building, circulating-water-pump buildings, switchgear building, emergency diesel building) were designed to withstand loads from an external blast wave (conservatively for design earthquake), there were not yet any explicit design provisions protecting the safety-relevant components inside the buildings against the resulting induced tremors because engineering judgment gave reasons that the structures would resist such loads.

In the event of an external hazard, the safety-related systems outside the UNS building are by definition no longer available, and the UNS has to take over the requisite safety functions for residual heat removal from the reactor.

The UNS building houses all plant components of the two redundant UNS trains such as pumps, cooling systems, batteries, switchgears and the control station. The building design took strict physical separation of the necessary components into account, so that any mutual influence (e.g. in the event of a fire) is excluded.

The UNS consists of two separate circuits. The injection system TF serves for the direct cooling of the reactor core and gives off its heat via a heat exchanger to the cooling system VE. Ventilators remove this heat from the UNS building to the environment via wet cell-type coolers. Two parallel arranged full-load pumps ensure the necessary coolant flow in both circuits.

Compared with the instrumentation and control system in the switchgear building, the instrumentation and control system of the UNS is implemented in diverse equipment technology.

Independent remote shutdown system (USUS)/KKP-1

The independent bunkered shutdown system USUS is a low-pressure residual heat removal system without operational tasks and is in stand-by during normal operation. It has the task in the event of

- external hazards,
- internal hazards,
- leak in the water area of the wetwell, and
- failure of installations of KKP Unit 1 due to external voltage coupling into the unit's I&C (also with simultaneous loss-of-coolant accident),

to flood the RPV, using the safety and pressure relief valves, and to discharge the decay and system heat from the RPV and the wetwell to the essential service water system via the USUS coolers. The USUS is mainly installed in the USUS building and consists of two technologically different, independent RHR trains, each with a pump

and a cooler, which is supplied by the REWAS (German acronym for “Reservewasser-system” – stand-by water supply system) or the essential service water system for USUS. For beyond design basis events, both the RPV and the wetwell can directly be supplied via the USUS with water from the Rhine or the REWAS well. The USUS is connected to the station power and emergency power supply system of the power plant via two trains. In addition, each trains has its own USUS diesel generator, located separately in the USUS building, which covers the entire power supply needed for each USUS train.

Cooling water systems

The systems for cooling water supply include the cooling water purification system, the circulating water system and the recirculation cooling system. The following cooling systems are also of importance:

- the component cooling water system for the operational cooling system 2,
- the component cooling water system for the operational cooling system 1,
- the component cooling water system for the RHR system,
- the essential service water systems, and
- the service water for the USUS.

Spent fuel pool

The irradiated fuel assemblies are stored in storage racks in the spent fuel pool inside the reactor building upper part above the containment until their activity and heat output have decayed so far that they can be shipped in transport casks to the on-site interim storage facility. The storage racks in the storage pool are arranged such that safe sub-criticality is ensured.

Spent fuel pool cooling

The decay heat of the fuel assemblies is removed via the spent fuel pool cooling system TG, which furthermore has to function of cleaning the water of the fuel pool. In the cooling circuit, the fuel pool water is constantly recirculated through a cooler. In this process, the heat is released to the River Elbe via one of the two operational cooling circuits.

If the spent fuel pool cooling system fails, two trains of the ECC and RHR system TH can be used for residual heat removal from the spent fuel pool. Hence there are a total of four trains in the systems TG and TH available, with the two TG trains using one common cooler. Additionally, for operational purposes – e.g. measures to decontaminate the auxiliary spent fuel pool cooling system - the auxiliary spent fuel pool cooling circuit TG50 has been installed.

In the event of an accident induced by an external hazard, the spent fuel pool cooler can be supplied by the fire-fighting system instead of one of the two operational spent fuel pool cooling circuits. This procedure is described in the operating manual.

Plant-specific characteristics

The technical solutions of spent fuel pool cooling are plant-specific. This will be e.g. stressed in chapter 5.2.

Measures by using the existing safety reserves

The objective of the emergency preparedness plan for the Krümmel NPP is to guarantee control of an emergency through organisational and technical measures. When the alarm system is triggered in the event of an emergency, the rules in the emergency manual go into effect in addition to the operating manual.

Independent injection system

In case of a complete failure of emergency power (station black-out) feeding of the reactor pressure vessel in the high pressure path is ensured by the high pressure safety injection system TJ (see above) which only requires battery power.

Before the batteries are completely discharged, the reactor has to be transferred into the low-pressure path so that RPV feeding can take place through accident management measures (see under “Additional injection and refilling of the RPV”).

Plant-specific characteristics

All German BWRs of construction line 69 are equipped with a comparable independent injection system.

Additional injection and refilling of the reactor pressure vessel (RPV)

As part of the low pressure accident management measures the following possibilities for feeding into the reactor pressure vessel are available:

- passive RPV-feeding from the feed water tank,
- RPV-feeding from the demineralized water tank via either the TG-system or the TH-systems,
- RPV-feeding from drinking water system,
- Injection of river water by means of fire extinguishing pump

Plant-specific characteristics

Comparable injection and refilling possibilities for the RPV exist also in the other German BWRs of construction line 69.

Divers pressure limitation for the RPV

Five smaller, electromotive conducted valves were installed parallel to the existing electromagnetically controlled safety and relief valves. The task of these diverse valves is to limit the pressure in the reactor pressure vessel and to prevent a high pressure scenario in case an assumed failure of all safety and relief valves.

Plant-specific characteristics

The other German BWRs of construction line 69 are also equipped with (a different number of) diverse valves.

<u>Plant internal accident management measures</u>

Filtered containment venting

The task of the filtered containment venting is to maintain containment integrity even in the event of severe accidents with core damage. For this purpose, gas/steam from the gas phase of the wetwell is exhausted, filtered and discharged into the environment by a separate piping system. The filter capacity is similar to the systems described before for the other NPPs..

Plant-specific characteristics

The other German BWRs of construction line 69 are also equipped with systems for filtered containment venting. A combination of variable pressure venturi scrubbers for aerosol confinement and special iodine filters is used.

Containment inertisation

In order to prevent of hydrogen combustions during a severe accident inside the containment, the containment (wetwell and drywell) of Krümmel NPP is inertisized with nitrogen during power operation. This measure covers completely the most unfavourable conditions during severe accidents.

Plant-specific characteristics

The containment of the other German BWRs of construction line 69 is inertisized in the same way.

Supply-air filtering for the control room

The task of the supply-air filtering system is to supply the control room with filtered air during beyond design basis accidents.

Plant-specific characteristics

All German NPPs have comparable systems. Mostly a combination of a HEPA filter and an iodine aerosol filter (activated charcoal filter) has been installed. Some of the filter systems are equipped with interchangeable filters.

Increased capacity of batteries

The Krümmel NPP meets the requirement that in case of loss of offsite power DC-power supply must be guaranteed for at least two hours.

Plant-specific characteristics

This is a general requirement for German NPPs. If not considered in the original design, this was achieved through backfitting.

Restoration of offsite power supply

The Krümmel NPP has been equipped with accumulators with sufficient pressurising media to operate circuit breakers necessary for restoration of grid supply.

Plant-specific characteristics

This is a general requirement for German NPPs. If not considered in the original design, this was achieved through backfitting.

Emergency grid connection

In addition to the main grid connection (400 kV) and the standby grid connection (110 kV) the Krümmel NPP has a third independent emergency grid connection (10 kV) to a pump-storage hydro power plant. Thereby emergency power supply is ensured even in case of a very rare external event.

Plant-specific characteristics

For a detailed description of the emergency power supply systems including plant-specific differences see also section 5.1.

Sampling system in the containment

The task of the sampling system is to sample the containment atmosphere after beyond design accidents with postulated core melt scenarios. The sampling is performed such that highly radioactive samples taken from the containment atmosphere/sump are diluted in sampling modules to manageable activities.

Emergency manual

All German NPPs have introduced an emergency manual that provides the protection-goal oriented procedures for execution of accident management measures and, in addition, contains the emergency preparedness organisation. Emergency procedures are constantly updated and supplemented.

Emergency training

Planning of emergency management measures is performed in every German NPP. Emergency preparedness and disaster response exercises are carried out regularly.

1.2 Overview of main safety significant differences of units

According to the time of their construction, the nuclear power plants with pressurised water reactors can be classified according to four construction lines, whereas those with boiling water reactors belong to two different construction lines. The construction line is given for each plant in the second column of Table 1-2.

The plants of the 1st construction line of pressurised water reactors (Obrigheim and Stade) have in the meanwhile been shut down. The 2nd construction line consists of PWRs which went into operation at the end of the 1970s. These have been succeeded by the so called “pre-Konvoi” plants of construction line 3 in the 1980s. The 4th construction line comprises three plants of the Konvoi type.

Concerning BWRs, there are two construction lines, i.e. construction line 69 and 72.

The construction lines illustrate the continuous development in safety technology. The 1st and 2nd construction line of PWR and the 69 construction line can be assigned to generation 2 of the international categories of NPPs and the other construction lines to generation 3.

The design characteristics important to safety are described in detail in Chapter 1.1.2.2 for the three types of NPP in Germany and important differences between the specific plant designs are described. A more detailed description of the available systems in every plant is also given in the technical chapters 2 to 6 as far as these systems are important for the related technical issue.

1.3 Use of PSA as part of the safety assessment

Since the beginning of the 1990s, safety reviews (SR) have been carried out periodically every 10 years of plant operation according to standardized national criteria. The performance of safety reviews is stipulated in the amended version of the Atomic Energy Act of April 2002 and based on the respective current national guidelines for the deterministic and probabilistic safety analysis (PSA). SRs consist of a deterministic safety status analysis, a PSA and a deterministic analysis on physical protection of the plant.

The PSA has to be performed under consideration to the PSA guideline /1.1/. Supplementary technical documents to this regulatory guideline provide guidance on methods /1.2/and data /1.3/ to be applied. The PSA guideline was revised in August 2005 to reflect the extended scope within the framework of the safety review.

According to the guideline a full scope Level 1 PSA has to be performed considering all plant internal events as well as plant internal and external hazards. A Level 2 PSA and as well a low power and shutdown PSA has to be performed for power operation states.

According to the current guideline full scope Level 1 PSA has to be performed for all plant operational states covering plant internal events as well as plant internal and external hazards. A Level 1 PSA for low power shutdown states as well as a Level 2 PSA has to be performed considering internal events.

A PSA is to be performed by applying methods corresponding to the state-of-the-art of science and technology. In this context, preference is given to the application of plant-specific data as far as possible. The frequency of operational occurrences (incidents) and accidents due to internal and external causes as well as potential faults and failures of safety related equipment are analysed. Furthermore, erroneous human actions are addressed.

A PSA analyses and quantifies the plant response to initiating events conceivable at the site and plant. In the PSA guideline there are given reference spectra (DWR, SWR) of generic initiating events. The reference spectra have to be checked with respect to relevance and completeness including plant-specific conditions. PSA is used to assess strengths and weaknesses, in particular vulnerabilities and cliff edge effects, in the design and operation and to identify potential improvements. Generally, relative not absolute criteria are used when comparing the results to those from deterministic safety analyses and engineering judgement. PSA results are also used to assess the determining factors and their significance contributing to vulnerabilities of a plant and to assess the balance of the plant design and operation.

The end states frequencies of event sequences are the main quantitative results of a Level 1 PSA. The end states are distinguished between plant hazard states and core damage states. Event sequences that lead to plant states which cannot be controlled according to the designed safety features are called hazard states. In addition, core damage states have been analysed. The latter also take into account measures for preventive accident management as specified in the emergency manual.

Every plant in Germany has performed a PSA according to these requirements. Since 2005 the German PSA guideline has included the request for a Level 1 PSA for low power shutdown states as well as for a Level 2 PSA. All of the analyses necessary to perform this demand have been started according to SR schedule.

The full scope Level 1 PSA results for any single German NPP are clearly far below the target value for core damage probabilities of plants in operation (< 1E-04/a) issued by IAEA. The ascertained values are even already lower than the values recommended for evolutionary reactors (1E-5/a). The present results of Level 2 PSAs show also very low probabilities for large release and large early release frequencies of fission products.

In the revised German PSA guideline from 2005 /1.1/ the external hazards which particularly have to be analysed in detail are specified: airplane crash, explosion pressure (blast) wave, external flooding and earthquake. A probabilistic analysis of possible consequences regarding extreme weather conditions is not provided.

In the context of the EU-Stresstests only the following PSA aspects related to the external hazards earthquake, flooding and extreme weather conditions are described more detailed.

The necessity of performing a PSA for the external hazard “earthquake” (abbr. SPSA) is decided by means of a staggered verification depending on the site specific seismological hazard, given as intensity (MSK scale) of the design basis earthquake:

(1) No analysis, intensity < VI
An analysis is not required.

(2) Restricted analysis, VI < intensity < VII
Plant walk downs have to be performed to assess the relevant equipment regarding their possibilities to withstand seismic loads.

(3) SPSA, VII < intensity
SPSA has to be performed according to the specifications of the German PSA guideline and its supporting technical documents on PSA methods and data.

The necessity of performing a PSA for the external hazard “flooding” (abbr. FPSA) is decided by a staggered verification. The required scope of analysis depends on the site specific flooding hazard. If it can be verified that the sum of contributions of flooding events to the core damage frequency is considerably less than 10^{-6}/a, a more detailed investigation is not necessary.

(4) No analysis
An external flooding of the site can be practically excluded.

(5) Restricted analysis (staggered screening)
It can be demonstrated that the flooding contribution to core damage frequency is less than 10-6/a, in particular that
- the design of the plant copes with the design basis water level of exceeding a frequency of 10-4/a
and
- the conditional probability of flooding in case of the design basis water level is considerably less than 10-2.
Additionally, the design of the permanent safety precautions against flooding has to be reassessed and the safe shutdown applying the rules of the instruction manual shall be carried out at a water level considerably lower than the design basis water level.

(6) FPSA
FPSA has to be performed according to the specifications of the German PSA guideline and its supporting technical documents on PSA methods and data.

Every plant in Germany – with a SR conducted after 2005 - has performed probabilistic analyses for seismic and flooding hazards taking into account the possibilities for sim-

plifying the analysis as given in the PSA guideline. Table 1-3 gives an overview of the performed PSA based on the information from the licensee reports.

Table 1-3: Depth of PSA analysis for the external hazards earthquake (SPSA), flooding (FPSA) and extreme weather conditions (WPSA)

NPP (last SR)	SPSA		FPSA	WPSA and additional remarks
	Intensity	Depth of Analysis	Depth of Analysis	
GKN-I (2007)	8	(3) SPSA	(2) restricted analysis	WPSA: no indications of a potential plant safety endangerment
GKN-II (2009)		(3) SPSA	(2) restricted analysis	
KKP 1 (2005)	7 - 8	not required when PSA was performed	not necessary	The last SR was 2005. FPSA and SPSA were not required.
KKP 2 (2008)		(3) SPSA	(2) restricted analysis	In case of flooding it is demonstrated that the flooding CDF contribution is less than 10^{-6}/a.
KRB B/C (2007)	7	(2) restricted analysis	(3)FPSA	WPSA: hazard exclusion at site (historical data assessment)
KKG (2008)	6	(1) no analysis	(2) restricted analysis	WPSA: negligible
KKI 1 (2004)	6.25	(2) restricted analysis	(2) restricted analysis	WPSA: negligible
KKI 2 (2009)		(2) restricted analysis	(2) restricted analysis	WPSA: negligible
KWB A (2001)	7.75	not required when PSA was performed	not necessary	The last SR was 2001. FPSA and SPSA were not required.
KWB B (2010)		(3) SPSA	(3) FPSA	
KKU (2001)	6	(1) no analysis	(3) FPSA	WPSA: negligible
KWG (2000)	6.5	(2) restricted analysis	(2) restricted analysis	
KKE (2009)	6	(1) no analysis	(1) no analysis	
KBR (2006)	6	(1) no analysis	(3) FPSA	WPSA: negligible
KKB (2001)	$\leq$ 6	(1) no analysis	(2) restricted analysis	WPSA: hazard exclusion at site SPSA: only occurrence frequency is calculated
KKK (2008)	6	(2) restricted analysis	(2) restricted analysis	WPSA: negligible SPSA: only occurrence frequency is calculated

There are no requirements within the German PSA guideline to perform a probabilistic assessment regarding hazards resulting from extreme weather conditions, nevertheless some NPPs have performed site specific assessments. These screening analyses show no hazardous indications by extreme weather conditions.

The PSA principle from German NPPs also takes into account failures of electrical components. This includes e.g. failures to equipment and in the electrical supply and corresponds to the general approach to modeling fault trees. Due to high redundancy and the separation of compartments can be practically excluded (10^{-7}/a) that an internal or external threat could lead to a Station Blackout. Additional to that, the secured essential cooling water system as an ultimate heat sink is a basic part of the residual heat removal system and has been mapped in all relevant event sequence analysis in detail.

References

/1.1/ Leitfaden zur Durchführung der Sicherheitsüberprüfung gemäß § 19a des Atomgesetzes
- Leitfaden Probabilistische Sicherheitsanalyse
Bekanntmachung vom 30. August 2005 (BAnz. 2005, Nr. 207)

/1.2/ Facharbeitskreis Probabilistische Sicherheitsanalyse für Kernkraftwerke
Methoden zur probabilistischen Sicherheitsanalyse für Kernkraftwerke
Stand: August 2005

/1.3/ Facharbeitskreis Probabilistische Sicherheitsanalyse für Kernkraftwerke
Daten zur probabilistischen Sicherheitsanalyse für Kernkraftwerke
Stand: August 2005

2 Earthquake

All nuclear power plants in Germany were designed to withstand the natural external hazards, such as wind and snow. In addition, flooding and earthquakes were taken into account depending on the site specific hazard. For flooding, earthquake and lightning nuclear safety standards are available, whereas the design against other natural hazards is based on conventional civil engineering standards.

Design against earthquake

The protection against external hazards is based on the Safety Criteria for Nuclear Power Plants /2.2/, the RSK guidelines /2.3/, accident guidelines /2.4/ and the relevant KTA safety standards /2.1/.

The Safety Criteria for Nuclear Power Plants /2.2/ require that all plant components necessary to safely shut down the nuclear reactor, to remove residual heat or to prevent uncontrolled release of radioactive material shall be designed such that they are able to perform their function even in the case of external hazards.

As regards the design against external hazards, the accident guidelines /2.4/ distinguish between hazards to be treated as design basis accidents in the sense of the guidelines and hazards which, on account of their low occurrence probability, are not considered as design basis accidents, and for which measures are taken to minimise the risk. Accordingly, the external natural hazards (earthquake, flood, external fire, lightning and other natural hazards) have to be considered as design basis accidents.

Since 1990, the protection against earthquakes is based on a “Bemessungserdbeben” (design basis earthquake, DBE, formerly called “safe shut-down earthquake”) in accordance with safety standard KTA 2201 /2.1/. The so-called operating basis earthquake, formerly to be considered additionally according to the previous version of 1975, was replaced by an “inspection earthquake” where only the plant condition has to be checked.

The “Bemessungserdbeben” has the largest intensity that, under consideration of scientific findings, could occur in a wider vicinity of the site of a radius of minimum 200 km). Depending on the site, the intensity of the design basis earthquake in Germany varies between less than VI and a maximum of VIII on the EMS/MSK scale. KTA 2201 requires a minimum DBE corresponding to intensity VI.

In the power plants of older construction lines, the seismic qualification of civil structures, components and plant equipment was partly based on simplified (quasi-static) methods which delivered the basic values for the corresponding design specifications. In more recent nuclear installations, the newly developed dynamic analyses were also applied.

Review by the regulatory authority for licensing

After the applicant had pre-selected a site, a regional planning procedure was initiated which preceded the nuclear licensing procedure. This took into account all impacts of the individual project on the public, on traffic ways, regional development, landscape

protection and nature conservation. Besides the site characteristics, the design of the nuclear installation against external hazards was checked in the nuclear licensing procedure.

Reevaluation of the site-specific conditions

The safety reviews which have to be performed every ten years as required by sect 19a of the Atomic Energy Act also include a reevaluation of the protective measures against external hazards, considering the development of the state of the art. In the case of earthquake, the safety standard KTA 2201 /2.1/ was applied. As a result of these reviews, measures have been taken or planned as far as necessary.

For some nuclear installations at sites with relevant seismicity, a reevaluation of the seismic safety has been performed due to the on-going development of methods for seismic hazard analysis and for design verification in particular in the context of periodic safety reviews. In general, the reevaluations with regard to the design of components showed that, on the basis of more precise seismic input and modern verification methods, the technical equipment of the plants partly has considerable margins with respect to seismic loading.

2.1 Design basis

2.1.1 Earthquake against which the plants are designed

The sites of German NPPs are located in areas of low to moderate seismicity. Typical macroseismic intensities for events with exceedance probabilities of 10^{-4}/a … 10^{-5}/a are in the range of I_{site}(EMS) ≈ V to I_{site}(EMS) ≈ VIII.

Due to the generally low seismicity seismic measurement data for hazard assessment are scarce. On the other hand abundant information on historic earthquakes dating back to as early as the year 800 A.D. is available. Therefore, the leading parameter for the seismic hazard assessment in Germany is the macroseismic intensity.

A site specific deterministic seismic hazard assessment is required for NPP sites in Germany according to Part 1 of the nuclear safety standard KTA 2201 /2.1/. In the new revision of this standard (to be published in 2012) the application of probabilistic methods for the hazard assessment will be required additionally. In practice, such probabilistic approaches have already been part of the seismic hazard assessment for all German NPP sites. The exceedance probability of the “Bemessungserdbeben” according to the revised KTA 2201.1 is 10^{-5}/a (median). In the past also an exceedance probability of 10^{-4}/a in combination with the 84th percentile of the ground motion parameters has been used. NPPs at sites where the site specific hazard is very low (I_{site}(EMS) < VI) are designed to withstand at least an earthquake with I_{site}(EMS) = VI. The seismic hazard assessments performed on behalf of the licensees are typically subject to a review by the authority.

All NPPs in Germany are designed in such a way that they can be safely brought to a cold shutdown state after a DBE. A shutdown is not triggered by seismic instrumentation (such an instrumentation is not required for and not installed at some NPPs in

northern German, because of the very low seismicity of that region) automatically, but has to be initiated manually if deemed necessary.

The information listed in the table is a brief compilation of the main aspects of the licensees' answers to the ENSREG questions. A comprehensive evaluation of the safety status of the NPPs is possible on the basis of the complete information provided by the licensees only.

Table 2-1: Characteristics of the DBE

NPP	Characteristics of the DBE	Methodology	Adequacy
Schleswig-Holstein			
KKB	pga_{hr} = 0.50 m/s^2 pga_v = 0.25 m/s^2 I_{site}(EMS) = V ½ p_{50} = 10^{-5}/a $t_{strong\ motion}$ = 4 s	site specific hazard assessment modified USAEC spectrum anchored at pga_{hr} = 0.50 m/s^2	assumptions for DBE confirmed by new seismic hazard assessments (latest reassessment in 2010)
KBR	pga_{hr} = 0.50 m/s^2 I_{site}(EMS) = V½ p_{50} = $7.3 \cdot 10^{-6}$/a $t_{strong\ motion}$ = 4 s	site specific hazard assessment design basis increased w. r. t. site specific hazard: I_{SSE} = VI	assumptions for DBE confirmed by new seismic hazard assessments (latest reassessment in 2003)
KKK	pga_h = 0.50 m/s^2 pga_v = 0.25 m/s^2 I_{site}(EMS) = V ½ p_{50} < 10^{-5}/a $t_{strong\ motion}$ = 2 s	site specific hazard assessment design basis increased w. r. t. site specific hazard: I_{SSE} = VI Housner response spectrum (generic) dynamic calculations using rod models (for recent reevaluations FE models were used)	assumptions for DBE confirmed by new seismic hazard assessments (latest reassessment in 2010)
Lower Saxony			
KKU	pga_{hc} = 0.42 m/s^2 I_{site}(EMS) = V½ p_{50} = $3.8 \cdot 10^{-6}$/a $t_{strong\ motion}$ = 4 s	site specific hazard assessment design basis increased w. r. t. site specific hazard: I_{SSE} = VI (pga_h = 0.5 m/s^2, pga_v = 0.25 m/s^2)	assumptions for DBE confirmed by new seismic hazard assessments (latest reassessment in 2003)
KKE	pga_h = 1.2 m/s^2 I_{site}(MSK) = VII	site specific hazard assessment modified USAEC re-	assumptions for DBE confirmed by new seismic hazard assessments

NPP	Characteristics of the DBE	Methodology	Adequacy
	$p_{84} = 10^{-5}$/a $t_{strong\ motion}$ = 2.6 s	sponse spectrum free field acceleration w/o SSI	(latest reassessment in 2011) reevaluated site specific hazard: I_{site}(MSK) = VI, $p_{50} < 10^{-5}$/a
KWG	$pga_{hc} = 0.75$ m/s^2 I_{site}(MSK) = VI ½ $p_{84} = 3.85 \cdot 10^{-6}$/a $t_{strong\ motion}$ = 3 s	site specific hazard assessment	assumptions for DBE confirmed by new seismic hazard assessments (latest reassessment in 1998)
Hesse			
KWB-A	$pga_{hr} = 1.5$ m/s^2 I_{site}(MSK) = VII ¾ $p_{50} \approx 10^{-5}$/a	site specific hazard assessment site specific response spectrum	assumptions for DBE in general confirmed by new seismic hazard assessments (latest reassessment in 2010) pga values of reassessments (I_{site} and p_{50} unchanged): pga_{hr}(1999) = 2.6 m/s^2 pga_{hr}(2010) = 1.25 m/s^2
KWB-B	$pga_{hr} = 1.5$ m/s^2 I_{site}(MSK) = VII ¾ $p_{50} \approx 10^{-5}$/a	site specific hazard assessment site specific response spectrum	assumptions for DBE in general confirmed by new seismic hazard assessments (latest reassessment in 2010) pga values of reassessments (I_{site} and p_{50} unchanged): pga_{hr}(1999) = 2.6 m/s^2 pga_{hr}(2010) = 1.25 m/s^2
Baden-Württemberg			
KWO	$pga_{hr} = 1.0$ m/s^2 $pga_v = 0.5$ m/s^2 I_{site}(MSK) = VII $p_{50} = 10^{-5}$/a ($\approx p_{84} = 10^{-4}$/a) $t_{strong\ motion}$ = 3 - 4 s	site specific hazard assessment	assumptions for DBE confirmed by new seismic hazard assessments (latest reassessment in 2005)
KKP 1	$pga_h = 1.5$ m/s^2 I_{site}(MSK) = VII - VIII $p < 10^{-5}$/a	site specific hazard assessment	adequacy of the design basis confirmed by new assessments (latest reassessment in 2003)

NPP	Characteristics of the DBE	Methodology	Adequacy
			new hazard assessments resulted in pga_h = 2.1 m/s^2 (shape of spectrum unchanged), new floor response spectra were generated and used for backfitting measures (since 1988)
KKP 2	pga_h = 2.1 m/s^2 I_{site}(MSK) = VII - VIII p < 10^{-5}/a	site specific hazard assessment modified USAEC spectrum rod models and dynamic (FE-) models taking account of SSI used for design structural loads calculated using response spectrum method floor response spectra calculated using time history analysis	adequacy of the design basis confirmed by new assessments (latest reassessment in 2003)
GKN-I	pga_h = 1.7 m/s^2 I_{site}(MSK) = VIII p < 10^{-6}/a	site specific hazard assessment spectrum generated by the response spectra method rod models and dynamic (FE-) models taking account of SSI used for design structural loads calculated using response spectrum method floor response spectra calculated using time history analysis	adequacy of the design basis confirmed by new assessments (latest reassessment in 2004) reevaluated site specific hazard (2001): I_{site}(MSK) = VII, p_{50}< 10^{-5}/a
GKN-II	pga_h = 1.7 m/s^2 pga_v = 0.85 m/s^2 I_{site}(MSK) = VIII p < 10^{-6}/a	site specific hazard assessment modified USAEC spectrum (scaled with the site specific pga value) rod models and dynamic (FE-) models taking account of SSI	adequacy of the design basis confirmed by new assessments (latest reassessment in 2004) reevaluated site specific hazard (2001): I_{site}(MSK) = VII, p_{50}< 10^{-5}/a

NPP	Characteristics of the DBE	Methodology	Adequacy
		used for design structural loads calculated using response spectrum method floor response spectra calculated using time history analysis	
Bavaria			
KKG	pga_{hk} = 0.83 m/s^2 I_{site}(EMS) = VI p_{50} = 1.52·10^{-5}/a $t_{strong\ motion}$ = 2 s	site specific hazard assessment	assumptions for DBE confirmed by new seismic hazard assessments (latest reassessment in 2007)
KKI-1	pga_{hk} = 0.71 m/s^2 I_{site}(EMS) = VI ¼ p_{50} = 1.1·10^{-5}/a $t_{strong\ motion}$ = 5 s	site specific hazard assessment	assumptions for DBE confirmed by new seismic hazard assessments (latest reassessment in 2004)
KKI-2	pga_{hk} = 0.75 m/s^2 I_{site}(EMS) = VI ¼ p_{50} = 1.1·10^{-5}/a $t_{strong\ motion}$ = 3.5 s	site specific hazard assessment design basis: I_{SSE} = VII ¼	assumptions for DBE confirmed by new seismic hazard assessments (latest reassessment in 2007)
KRB-II-B	pga_h = 1.0 m/s^2 pga_v = 0.5 m/s^2 I_{site}(EMS) = VII p < 10^{-4}/a $t_{strong\ motion}$ = 10 s	site specific hazard assessment modified USAEC spectrum	reevaluated site specific hazard (1993): I_{site}(EMS) = VII, p_{50} = 3·10^{-6}/a, $t_{strong\ motion}$ = 4 s
KRB-II-C	pga_h = 1.0 m/s^2 pga_v = 0.5 m/s^2 I_{site}(EMS) = VII p < 10^{-4}/a $t_{strong\ motion}$ = 10 s	site specific hazard assessment modified USAEC spectrum	reevaluated site specific hazard (1993): I_{site}(EMS) = VII, p_{50} = 3·10^{-6}/a, $t_{strong\ motion}$ = 4 s

Abbreviations used in the table:
pga_{hr} = horizontal resultant of the peak ground acceleration
pga_{hc} = horizontal component of the peak ground acceleration
pga_h = horizontal peak ground acceleration (information about type not provided)
pga_v = vertical component of the peak ground acceleration
I_{site} = macroseismic intensity at the site
I_{SSE} = macroseismic intensity of the safe shutdown earthquake
p_{50} = exceedance probability in terms of the median value

p_{84} = exceedance probability in terms of the 84th percentile
$t_{strong\ motion}$ = duration of the strong motion phase of the earthquake

2.1.2 Provisions to protect the plants against the design basis earthquake

Since the "Bemessungserdbeben" (i. e. DBE) is part of the design basis of German NPPs, all SSCs necessary to perform the fundamental safety functions (i. e. reactivity control, fuel cooling, containment of radioactive materials / radiation protection) are classified as EK I and designed to withstand the DBE. This holds also for those SSCs whose failure could endanger EK I SSCs. These SSCs are classified as EK IIa. All other SSCs are designed according to conventional standards. This implies that e. g. for non-safety related buildings and for the infrastructure the requirements of the conventional civil engineering standard DIN EN 1998-1 (EC 8) /2.5/ (formerly DIN 4149 /2.6/) apply with respect to earthquake prove design.

The fact that the DBE is a design basis accident also implies that no mobile equipment or accident management measures are necessary to control this event. Likewise the loss of off-site power is assumed in case of the DBE. Therefore, the emergency power supply (diesel generators and associated electrical facilities) is designed to withstand the DBE.

The operator actions to be performed after an earthquake are defined in Part 6 of nuclear safety standard KTA 2201 /2.1/. KTA 2201 Part 6 stipulates a graded approach for post-earthquake measures. Independent of the intensity of the earthquake the plant has to be checked for compliance with the specified normal operating conditions. If those are not met, the corresponding procedures of the operating manual have to be applied (symptom-based approach, regardless of the initiating event). Otherwise the decision to continue power operation or to shutdown the plant depends on the intensity of the earthquake. Between 0.4 and 0.6 times the ground motion values of the DBE a computational check of the load levels experienced by safety related SSCs is required. If ground motion values exceed 0.6 times the DBE, the plant has to be shutdown.

The seismic instrumentation of German NPPs does not trigger an automatic scram. But depending on the damage induced by the earthquake the reactor protection system will initiate automatic measures to bring the reactor into a safe state if necessary.

The information listed in the table is a brief compilation of the main aspects of the licensees' answers to the ENSREG questions. A comprehensive evaluation of the safety status of the NPPs is possible on the basis of the complete information provided by the licensees only.

Table 2-2: Secondary effects and infrastructure

NPP	Secondary Effects	Infrastructure
Schleswig-Holstein		
KKB	potential secondary effects of the DBE analysed (but not necessarily relevant) for the plant: • gas releases in neighbouring in-	due to the low intensity of the DBE the accessibility of the plant is ensured

NPP	Secondary Effects	Infrastructure
	dustrial facilities • damage to the watergates at the NO Channel • subsidence of the dike • damage to infrastructure (roads and railway tracks) for these secondary effects suitable measures are foreseen	
KBR	combinations of DBE with secondary effects are assessed on a probabilistic basis potential secondary effects of the DBE analysed (but not necessarily relevant) for the plant: • pressure wave due to failure of high-energy vessels • fire for these secondary effects suitable measures are foreseen liquefaction can be excluded based on soil investigations	due to the low intensity of the DBE the necessary infrastructure will be available
KKK	unavailability of external water (exception: essential service water system) and power supply is assumed due to the low intensity of the DBE no relevant additional impacts on the plant and the accessibility are expected	due to the low intensity of the DBE the necessary infrastructure will be available
Lower Saxony		
KKU	combinations of DBE with secondary effects are assessed on a probabilistic basis potential secondary effects of the DBE analysed (but not necessarily relevant) for the plant: • pressure wave due to failure of high-energy vessels • fire for these secondary effects suitable measures are foreseen liquefaction can be excluded based on soil investigations	due to the low intensity of the DBE the necessary infrastructure will be available

NPP	Secondary Effects	Infrastructure
KKE	potential secondary effects of the DBE analysed (but not necessarily relevant) for the plant: • loss of transformer station • damage in the auxiliary building • loss of the turbine building • decline of river water level • fires • explosions for these secondary effects suitable measures are foreseen no effects on the ground are expected due to the low intensity of potential aftershocks no effects are expected hazards due to seismically induced landslides / slope failures can be excluded liquefaction can be excluded based on expert assessments	only minor damage to buildings is expected
KWG	combinations of DBE with secondary effects are assessed on a probabilistic basis potential secondary effects of the DBE analysed (but not necessarily relevant) for the plant: • pressure wave due to failure of high-energy vessels • fire for these secondary effects suitable measures are foreseen liquefaction can be excluded based on expert assessments	due to the low intensity of the DBE the necessary infrastructure will be available
Hesse		
KWB-A	fires are considered potential secondary effect of the DBE, suitable measures are foreseen to control such fires relevant amounts of hazardous materials are not stored on-site hazards due to seismically induced	due to the moderate intensity of the DBE the necessary infrastructure (e. g. buildings and access roads) will be available access to the plant is also possible by boat via the Rhine river necessary operating materials are

NPP	Secondary Effects	Infrastructure
	landslides / slope failures can be excluded liquefaction can be excluded based on expert assessments	stored on-site at least two shifts are on-site
KWB-B	fires are considered potential secondary effect of the DBE, suitable measures are foreseen to control such fires relevant amounts of hazardous materials are not stored on-site hazards due to seismically induced landslides / slope failures can be excluded liquefaction can be excluded based on expert assessments	due to the moderate intensity of the DBE the necessary infrastructure (e. g. buildings and access roads) will be available access to the plant is also possible by boat via the Rhine river necessary operating materials are stored on-site at least two shifts are on-site
Baden-Württemberg		
KWO	potential secondary effects of the DBE analysed (but not necessarily relevant) for the plant: • pressure waves • internal flooding • missiles • fires • decline or rise of river water level • earthquake induced flotsam • liquefaction • landslides / slope failures safety related impacts from the effects above on the fuel storage pool can be excluded	due to the low intensity of the DBE relevant damage to the infrastructure (e. g. roads) is not expected access to the plant is also possible by boat via the Neckar river
KKP 1	potential secondary effects of the DBE which have been considered: • leaks of not seismically qualified pipes (including feed water and main steam pipes in the turbine building) • internal flooding • failure of vessels • missiles • fires	due to the moderate intensity of the DBE the necessary infrastructure (e. g. buildings and access roads) will be available equipment is available to clear debris blocking access ways access to the plant is also possible by boat via the Rhine river

NPP	Secondary Effects	Infrastructure
	• explosions • release of hazardous materials • loss of feed water • loss of (operational) heat sink • liquefaction • aftershocks • landslides / slope failures (can be excluded) • decline or rise of river water level • blockage of service water by flotsam safety related impacts from the effects above can either be excluded (design, physically impossible, or not relevant) or suitable protection measures are foreseen	
KKP 2	potential secondary effects of the DBE which have been considered: • loss of transformers • damage in the auxiliary building • loss of turbine building • leaks of not seismically qualified pipes • internal flooding • failure of vessels • missiles • fires • explosions • release of hazardous materials • loss of (operational) heat sink • liquefaction • aftershocks • landslides / slope failures (can be excluded) • decline or rise of river water level • blockage of service water by flotsam safety related impacts from the ef-	due to the moderate intensity of the DBE the necessary infrastructure (e. g. buildings and access roads) will be available equipment is available to clear debris blocking access ways access to the plant is also possible by boat via the Rhine river

NPP	Secondary Effects	Infrastructure
	fects above can either be excluded (design, physically impossible, or not relevant) or suitable protection measures are foreseen	
GKN-I	potential secondary effects of the DBE which have been considered: • leaks of not seismically qualified pipes (including feed water and main steam pipes outside the containment) • internal flooding • failure of vessels • missiles • fires • explosions • release of hazardous materials • liquefaction • aftershocks • landslides / slope failures (can be excluded) • decline or rise of river water level • blockage of service water by flotsam safety related impacts from the effects above can either be excluded (design, physically impossible, or not relevant) or suitable protection measures are foreseen	due to the moderate intensity of the DBE the necessary infrastructure (e. g. buildings and access roads) will be available equipment is available to clear debris blocking access ways access to the plant is also possible by boat via the Neckar river
GKN-II	potential secondary effects of the DBE which have been considered: • leaks of not seismically qualified pipes (including feed water and main steam pipes outside the containment) • internal flooding • failure of vessels • missiles • fires • explosions • release of hazardous materials	due to the moderate intensity of the DBE the necessary infrastructure (e. g. buildings and access roads) will be available equipment is available to clear debris blocking access ways access to the plant is also possible by boat via the Neckar river

NPP	Secondary Effects	Infrastructure
	• liquefaction • aftershocks • landslides / slope failures (can be excluded) • decline or rise of river water level • blockage of service water by flotsam safety related impacts from the effects above can either be excluded (design, physically impossible, or not relevant) or suitable protection measures are foreseen	
Bavaria		
KKG	combinations of DBE with secondary effects are assessed on a probabilistic basis potential secondary effects of the DBE analysed (but not necessarily relevant) for the plant: • pressure wave due to failure of high-energy vessels • fire for these secondary effects suitable measures are foreseen liquefaction can be excluded based on expert assessments	due to the low intensity of the DBE the necessary infrastructure will be available
KKI-1	combinations of DBE with secondary effects are assessed on a probabilistic basis potential secondary effects of the DBE analysed (but not necessarily relevant) for the plant: • pressure wave due to failure of high-energy vessels • fire for these secondary effects suitable measures are foreseen liquefaction can be excluded based on expert assessments	due to the low intensity of the DBE the necessary infrastructure will be available
KKI-2	combinations of DBE with secondary effects are assessed on a probabilistic basis	due to the low intensity of the DBE the necessary infrastructure will be available

NPP	Secondary Effects	Infrastructure
	potential secondary effects of the DBE analysed (but not necessarily relevant) for the plant: • pressure wave due to failure of high-energy vessels • fire for these secondary effects suitable measures are foreseen liquefaction can be excluded based on expert assessments	
KRB-II-B	potential secondary effects of the DBE analysed (but not necessarily relevant) for the plant: • fire • LOCA outside the reactor building • flooding • landslides / slope failures either safety related impacts from these effects can be excluded or suitable protection measures are foreseen	due to the low intensity of the DBE the necessary infrastructure will be available
KRB-II-C	potential secondary effects of the DBE analysed (but not necessarily relevant) for the plant: • fire • LOCA outside the reactor building • flooding • landslides / slope failures either safety related impacts from these effects can be excluded or suitable protection measures are foreseen	due to the low intensity of the DBE the necessary infrastructure will be available

2.1.3 Compliance of the plants with its current licensing basis

Maintenance and inspections

To verify that the German NPPs conform to the licensing basis, independent TSOs are involved in the regulatory supervision process on behalf of the regulatory authority.

These TSOs e. g. participate in selected periodic testing, perform inspections in the plants and review technical documents submitted to the authority.

Details on monitoring, periodic testing, and maintenance are stipulated in the inspection manual and the operating manual of the plant. Safety related sections of these documents have to be approved by the authority.

A graded supervision process (for minor changes that do not involve safety related equipment an approval by the authority is not required; for changes with potential effects on the safety status of the plant approval by the authority is mandatory) ensures that plant modifications do not impair the overall safety of the plant and the protection against external hazards.

In the framework of the periodic safety reviews that have to be performed every 10 years, also the protection of the plants against external hazards is reviewed.

Availability of mobile equipment

The fact that the DBE is a design basis accident implies that no mobile equipment or accident management measures are necessary to control this event. If mobile equipment is provided for accident management measures in case of beyond design basis events, this equipment is subject to periodic testing.

All plants have contracts with AREVA and the “Kerntechnische Hilfsdienst GmbH” (radiation protection, decontamination, and robot devices) to ensure additional support in case of emergencies.

Known deviations

No current deviations regarding the necessary protection against earthquakes are known. If such deviations occur, these are dealt with in the framework of the regulatory oversight procedure. If necessary, appropriate measures are applied.

Compliance checks after Fukushima accident

Besides the countrywide safety review after the Fukushima accident (RSK Sicherheitsüberprüfung) that aimed at an evaluation of the robustness of the German NPPs w. r. t. beyond design basis events, some states have performed additional safety reviews focusing on different safety aspects.

Also the VGB (association of power plant operators) had initiated an evaluation of the Tohoku earthquake and its implications for the safety of German NPPs. No indication of systematic deficiencies in the design of German NPPs against earthquakes was found in this evaluation.

2.2 Evaluation of safety margins

2.2.1 Range of earthquake leading to severe fuel damage

In general, no weak points or cliff edge effects have been identified. Due to the conservative design, safety margins are available which ensure that no cliff edge effects can occur if the design basis is slightly exceeded. For loads well above the design basis the identification of cliff edge effects would require extensive investigation. On the other hand these are not necessary, because the tectonic and geologic realities in Germany limit the strength of possible earthquakes. The occurrence of earthquakes with substantial damage to the reactor building can be practically excluded under the given seismic conditions.

The information listed in the table is a brief compilation of the main aspects of the licensees' answers to the ENSREG questions. A comprehensive evaluation of the safety status of the NPPs is possible on the basis of the complete information provided by the licensees only.

Table 2-3: Seismic margins to fuel damage

NPP	Assessments of seismic margins
Schleswig-Holstein	
KKB	earthquakes with higher intensities than the DBE can be excluded damage to buildings only in case of earthquakes with I_{site}(EMS) >> VII (i. e. DBE + 1 ½ steps in intensity) exceedance probability for I_{site} = VII: 10^{-7}/a
KBR	no severe fuel damage is expected in case of the most severe earthquake that is physically possible at the site
KKK	site specific hazard (pga_h = 0.15 - 0.30 m/s^2) lower than design basis (pga_h = 0.50 m/s^2), this implies an inherent safety margin exceedance probability for I_{site}(EMS) > VI: 10^{-6}/a protection against pressure waves and aircraft crash implies additional robustness of the design
Lower Saxony	
KKU	no severe fuel damage is expected in case of the most severe earthquake that is physically possible at the site
KKE	no site specific information provided in the final report
KWG	no severe fuel damage is expected in case of the most severe earthquake that is physically possible at the site seismic PSA indicates no significant contribution of BDBEs to the CDF protection against pressure waves and aircraft crash implies additional robustness of the design

NPP	Assessments of seismic margins
Hesse	
KWB-A	conservative design approaches indicate robustness w. r. t BDBE exceedance probability of earthquakes with I_{site}> VIII ½ is approx. 10^{-7}/a exceedance probability of earthquakes with I_{site}> IX is smaller than 10^{-8}/a
KWB-B	conservative design approaches indicate robustness w. r. t BDBE exceedance probability of earthquakes with I_{site}> VIII ½ is approx. 10^{-7}/a exceedance probability of earthquakes with I_{site}> IX is smaller than 10^{-8}/a according to the seismic PSA of the plant the CDF is ≈ 10^{-9}/a for an earthquake of intensity VIII ¼ - VIII ½ (taking into account accident management measures)
Baden-Württemberg	
KWO	protection against aircraft crash provides sufficient robustness of the design to cover BDBE spent fuel pool decoupled from the building structure geometry of the building ensures water cover of the fuel elements in case of a postulated BDBE induced leakage of the spent fuel pool due to the very low heat production even a postulated exposure of the fuel elements does not lead to severe fuel damage
KKP 1	conservative hazard assessment methods and design approaches as well as the international operating experience indicate sufficient robustness w. r. t BDBE no loss of essential safety functions is expected for earthquakes with intensity I_{site} = IX exceedance probability of earthquakes with I_{site}> IX is smaller than 10^{-8}/a damage to the reactor building is possible for intensities I_{site}> X only, such intensities can be practically excluded at the given site
KKP 2	conservative hazard assessment methods and design approaches as well as the international operating experience indicate sufficient robustness w. r. t BDBE seismic PSA limited to intensities ≤ DBE, extrapolation indicates an increase of damage beyond the DBE, in particular affecting SSCs not designed to withstand earthquakes loss of essential safety functions can be practically excluded for earthquakes with intensity I_{site} = VIII - IX (exceedance probability < 10^{-6}/a) loss of essential safety functions is not expected but cannot be completely excluded for I_{site} = IX - X (exceedance probability < 10^{-8}/a) damage to the reactor building is possible for intensities I_{site}> X only, such intensities can be practically excluded at the given site
GKN-I	conservative hazard assessment methods and design approaches as well as the international operating experience indicate sufficient robustness

NPP	Assessments of seismic margins
	w. r. t. BDBE according to the seismic PSA of the plant the earthquake-induced CDF is < 10^{-8}/a even for earthquakes with low exceedance probabilities the seismic PSA indicates no cliff edge effects the plant is designed to withstand an earthquake of I_{site} = VIII (exceedance probability < 10^{-6}/a) whereas the site specific hazard (reevaluation in 2001) for an exceedance probability p = 10^{-5}/a is I_{site} = VII even for I_{site} = IX (exceedance probability < 10^{-7}a) no loss of essential safety functions is expected exceedance probability of earthquakes with I_{site}> IX is smaller than 10^{-8}/a damage to the reactor building is possible for intensities I_{site}≈ X only, such intensities can be practically excluded at the given site
GKN-II	conservative hazard assessment methods and design approaches as well as the international operating experience indicate sufficient robustness w. r. t. BDBE seismic PSA limited to intensities ≤ DBE, extrapolation indicates an increase of damage beyond the DBE, in particular affecting SSCs not designed to withstand earthquakes the plant is designed to withstand an earthquake of I_{site} = VIII (exceedance probability < 10^{-6}/a) whereas the site specific hazard (reevaluation in 2001) for an exceedance probability p = 10^{-5}/a is I_{site} = VII even for I_{site} = IX (exceedance probability < 10^{-7}a) no loss of essential safety functions is expected exceedance probability of earthquakes with I_{site}> IX is smaller than 10^{-8}/a damage to the reactor building is possible for intensities I_{site}≈ X only, such intensities can be practically excluded at the given site
Bavaria	
KKG	due to the low seismicity no seismically induced failures are expected that could lead to fuel damage the design against aircraft crashes and pressure waves provides additional robustness w. r. t. BDBEs
KKI-1	due to the low seismicity no seismically induced failures are expected that could lead to fuel damage the design against aircraft crashes and pressure waves provides additional robustness w. r. t. BDBEs
KKI-2	due to the low seismicity no seismically induced failures are expected that could lead to fuel damage the plant is designed to withstand an earthquake of I_{site} = VII ¼ whereas the site specific hazard for an exceedance probability p = 1.1 · 10^{-5}/a is I_{site} = VI ¼ the design against aircraft crashes and pressure waves provides additional

NPP	Assessments of seismic margins
	robustness w. r. t. BDBEs
KRB-II-B	for some SSCs functional reliability (or structural integrity for passive components) is expected for earthquake intensities in the range of I_{site} = VIII - IX, e.g.: isolating valves steel liner of the wetwell, safety related piping in the reactor building, for other SSCs only stability has been shown for earthquake intensities in the range of I_{site} = VIII - IX, e.g.: low-pressure pumps, component coolers, component cooling pumps, RHR heat exchangers, and service water pumps
KRB-II-C	for some SSCs functional reliability (or structural integrity for passive components) is expected for earthquake intensities in the range of I_{site} = VIII - IX, e.g.: isolating valves steel liner of the wetwell, safety related piping in the reactor building, for other SSCs only stability has been shown for earthquake intensities in the range of I_{site} = VIII - IX, e.g.: low-pressure pumps, component coolers, component cooling pumps, RHR heat exchangers, and service water pumps

2.2.2 Range of earthquake leading to loss of containment integrity

In general, no weak points or cliff edge effects have been identified. Due to the conservative design, safety margins are available which ensure that no cliff edge effects can occur if the design basis is slightly exceeded. For loads well above the design basis the identification of cliff edge effects would require extensive investigation. On the other hand, these are not necessary, because the tectonic and geologic realities in Germany limit the strength of possible earthquakes.

The information listed in the table is a brief compilation of the main aspects of the licensees' answers to the ENSREG questions. A comprehensive evaluation of the safety status of the NPPs is possible on the basis of the complete information provided by the licensees only.

Table 2-4: Seismic margins to loss of containment integrity

NPP	Assessments of seismic margins
Schleswig-Holstein	
KKB	earthquakes with substantial damage to the reactor building can be practically excluded under the given seismic conditions
KBR	loss of barrier function of the containment is not expected due to the low seismicity
KKK	exceedance probability for I_{site}(EMS) > VI: 10^{-6}/a barrier functions are always ensured
Lower Saxony	

NPP	Assessments of seismic margins
KKU	loss of barrier function of the containment is not expected due to the low seismicity and the robustness of the plant
KKE	the containment is designed to withstand earthquakes with I_{site}(MSK) = VIII (i. e. DBE + 1 step in intensity) because it is identical to the containment of GKN-II the containment is designed for rock soil conditions (subsoil class R) instead of lose sediments (subsoil class A), therefore, the acceleration values are further increased in the relevant spectral range of the design basis response spectrum leading to additional margins
KWG	containment is designed to withstand aircraft crashes, this design covers also BDBEs
Hesse	
KWB-A	reference is made to the seismic PSA of KWB-B
KWB-B	according to the seismic PSA the containment has a low failure probability in the intensity range I_{site} = VI - VIII ½ earthquakes of higher intensity can be excluded due to the geological site characteristics
Baden-Württemberg	
KWO	due to the limited radioactive inventory (compared to NPPs in operation) lower requirements apply for the containment robustness the robust civil engineering structure of the emergency building (where the spent fuel pool is located) provides sufficient protection against earthquakes
KKP 1	damage to the containment is possible for intensities $I_{site} \approx$ X only, such intensities can be practically excluded at the given site exceedance probability of earthquakes with $I_{site} >$ IX is smaller than 10^{-8}/a
KKP 2	damage to the containment is possible for intensities $I_{site} \approx$ X only, such intensities can be practically excluded at the given site exceedance probability of earthquakes with $I_{site} >$ IX is smaller than 10^{-8}/a
GKN-I	damage to the containment is possible for intensities $I_{site} \approx$ X only, such intensities can be practically excluded at the given site exceedance probability of earthquakes with $I_{site} >$ IX is smaller than 10^{-8}/a
GKN-II	damage to the containment is possible for intensities $I_{site} \approx$ X only, such intensities can be practically excluded at the given site exceedance probability of earthquakes with $I_{site} >$ IX is smaller than 10^{-8}/a
Bavaria	
KKG	the containment and the reactor building that is designed to withstand external hazards provide enough protection also for BDBEs due to the low seismicity and the conservative design no loss of the con-

NPP	Assessments of seismic margins
	tainment function due to seismic events is expected
KKI-1	the containment and the reactor building that is designed to withstand external hazards provide enough protection also for BDBEs due to the low seismicity and the conservative design no loss of the containment function due to seismic events is expected
KKI-2	the plant is designed to withstand an earthquake of I_{site} = VII ¼ whereas the site specific hazard for an exceedance probability p = 1.1 · 10^{-5}/a is I_{site} = VI ¼ the containment and the reactor building that is designed to withstand external hazards provide enough protection also for BDBEs due to the low seismicity and the conservative design no loss of the containment function due to seismic events is expected
KRB-II-B	integrity of the pressure boundary is expected for earthquake intensities up to I_{site} = IX release of the radioactive inventory of the spent fuel pool is expected only if there is structural damage to the reactor building
KRB-II-C	integrity of the pressure boundary is expected for earthquake intensities up to I_{site} = IX release of the radioactive inventory of the spent fuel pool is expected only if there is structural damage to the reactor building

2.2.3 Earthquake exceeding the design basis earthquake for the plants and consequent flooding exceeding design basis flood

Due to the topography in the surroundings of the German NPPs a BDBF as a consequence of an earthquake (also BDBE) can be excluded.

If the flood protection measures at a NPP site are not designed to withstand the DBE, nuclear safety standard KTA 2207 /2.7/ stipulates that it has to be shown that the safety of the plant (compliance of the fundamental safety functions, i. e. control of reactivity, fuel cooling, containment of radioactive materials, and limitation of exposure) is not compromised in case of the combination of a flood with an exceedance probability of 10^{-2}/a and an earthquake with a loading level of 40 % of the DBE. This requirement provides a basic protection against flood events triggered by BDBEs.

2.2.4 Measures which can be envisaged to increase robustness of the plants against earthquakes

The large already existing safety margins are considered appropriate. Due to the low seismicity in Germany, no additional measures are envisaged for the future to further increase the robustness of the plants.

2.3 Assessment and conclusions of the German regulatory body

2.3.1 Status of the documents presented by the licensees

The documents that are the basis for the assessment have been classified by the licensees according to their degree of approval in the regulatory process. The Länder authorities in general confirm the appropriateness of the classification. Differing classifications that occurred in some cases have no influence on the overall validity of the assessments.

2.3.2 Assessment of the regulator

The NPPs in Germany are designed to withstand earthquakes according to the site specific seismic hazard.

The Länder authorities confirm that the reports of the licensees essentially conform to the ENSREG requirements. However, due to the tight schedule of the stress test quantitative assessments of safety margins were not always feasible.

The Länder authorities basically confirm the information and assessments provided by the licensees. This holds in particular for the information regarding the licensing basis. In general, the assessments of safety margins are plausible, but cannot be verified in line with the normal regulatory standards.

The following additional statement are given for KWB:

With respect to DBE there is in KWB a particular situation that after start of commercial operation a new DBE was introduced. This revised DBE spectrum resulted in the wake of the regulatory stipulation in recommendations formulated during periodic safety reviews and corresponding measures as well as analyses were started by the licensee. The improvement measures are still ongoing. Since some of these measures are not yet finalized, the authority cannot confirm all information provided by the licensee describing a situation, which will be reached after completion of the measures. Further the regulatory authority agrees with the statement of the licensee that BDBEs, which may leading to core damage are of a very low frequency but based on the available documents they cannot be entirely excluded.

The assessment by the RSK regarding the seismic design shows that there partly exist considerable safety margins. In general, this judgement is based on the conservatism of the calculation chains and the knowledge gained from the seismic PSAs performed so far for the individual plants.

2.3.3 Conclusions

According to the results in most of the plants no additional measures are necessary. Only one plant considers improvements to further reduce risk. These will be regulated within the routine oversight process.

References

/2.1/ Kerntechnischer Ausschuss (KTA)
Auslegung von Kernkraftwerken gegen seismische Einwirkungen, KTA-Regel 2201
Teil 1: Grundsätze (November 2011)
Teil 2: Baugrund (Juni 1990)
Teil 3: Auslegung der baulichen Anlagen (Entwurf, Juni 1990)
Teil 4: Anforderungen an Verfahren zum Nachweis der Erdbebensicherheit für maschinen- und elektrotechnische Anlagenteile (März 1990)
Teil 5: Seismische Instrumentierung (Juni 1996)
Teil 6: Maßnahmen nach Erdbeben (Juni 1992)

/2.2/ Sicherheitskriterien für Kernkraftwerke vom 21. Oktober 1977 (BAnz. 1977, Nr. 206)

/2.3/ RSK-Leitlinien für Druckwasserreaktoren
3. Ausgabe vom 14. Oktober 1981 (BAnz. 1982, Nr. 69a) mit den Änderungen: in Abschnitt 21.1 (BAnz. 1984, Nr. 104), in Abschnitt 21.2 (BAnz. 1983, Nr. 106) und in Abschnitt 7 (BAnz. 1996, Nr. 158a) mit Berichtigung (BAnz. 1996, Nr. 214) und den Anhängen vom 25. April 1979 zu Kapitel 4.2 der 2. Ausgabe der RSK-LL vom 24. Januar 1979 (BAnz. 1979, Nr. 167a)
Anhang 1: Auflistung der Systeme und Komponenten, auf die die Rahmenspezifikation Basissicherheit von druckführenden Komponenten anzuwenden ist
Anhang 2: Rahmenspezifikation Basissicherheit; Basissicherheit von druckführenden Komponenten: Behälter, Apparate, Rohrleitungen, Pumpen und Armaturen (ausgenommen: Einbauteile, Bauteile zur Kraftübertragung und druckführende Wandungen < DN 50)

/2.4/ Leitlinien zur Beurteilung der Auslegung von Kernkraftwerken mit Druckwasserreaktoren gegen Störfälle im Sinne des § 28 Abs. 3 StrlSchV (Störfall-Leitlinien) vom 18. Oktober 1983 (BAnz. 1983, Nr. 245a)

/2.5/ Deutsches Institut für Normung e. V
DIN EN 1998-1:2010-12, Eurocode 8: Auslegung von Bauwerken gegen Erdbeben – Teil 1: Grundlagen, Erdbebeneinwirkungen und Regeln für Hochbauten; Deutsche Fassung EN 1998-1:2004 + AC:2009, einschließlich: DIN EN 1998-1/NA:2011-01, Nationaler Anhang – National festgelegte Parameter – Eurocode 8: Auslegung von Bauwerken gegen Erdbeben – Teil 1: Grundlagen, Erdbebeneinwirkungen und Regeln für Hochbau

/2.6/ Deutsches Institut für Normung e. V
DIN 4149: 2005-04: Bauten in deutschen Erdbebengebieten. Lastannahmen, Bemessung und Ausführung üblicher Hochbauten; Normenausschuss im Bauwesen (NABau) im DIN – April 2005, Berlin

/2.7/ Kerntechnischer Ausschuss (KTA)
Schutz von Kernkraftwerken gegen Hochwasser, KTA-Regel 2207, November 2004

3 Flooding

Generic aspects

All nuclear power plants in Germany were designed to withstand the usual natural external loads, such as wind and snow. In addition, flooding and earthquakes were taken into account depending on the site specific hazard. For flooding, earthquake and lightning nuclear safety standards are available, whereas the design against other natural hazards is based on conventional civil engineering standards.

Design against flooding

The protection against external hazards is based on the Safety Criteria for Nuclear Power Plants /3.2/, the RSK guidelines /3.3/, accident guidelines /3.4/ and the relevant KTA safety standards /3.1/.

The Safety Criteria for Nuclear Power Plants /3.2/ require that all plant components necessary to safely shut down the reactor, to remove residual heat or to prevent uncontrolled release of radioactive material shall be designed to be able to perform their function even in the case of external hazards.

The design requirements specified in the accident guidelines /3.4/ for external hazards distinguish between hazards to be treated as design basis accidents and hazards which, on account of their low occurrence probability, are not considered as design basis accidents, and for which measures must be taken to minimise the risk. Accordingly, the external natural hazards (earthquake, flood, external fire, lightning and other natural impacts) are considered as design basis accidents.

Since 1982, the requirements for flood protection measures have been specified in nuclear safety standard [KTA 2207] /3.1/, revised in the years 1992 and 2004. Pursuant to this standard, a permanent flood protection has to be provided.

The latest changes of nuclear safety standard [KTA 2207] /3.1/ compared with the previous version concern in particular the specification and determination of the design basis flood. It is now consistently based on an exceedance probability of 10-4/a. Since then, the amended safety standard has been applied to all modification licences regarding flood protection.

Under special boundary conditions, protection against the difference between the water level of a flood with an exceedance probability of 10^{-2}/a and the design basis water level of 10^{-4}/a may also be provided by temporary measures.

The sites of the nuclear power plants are mostly located inland at rivers and, in some cases, at estuaries with tidal influences. In most of the cases, sites have been selected which are located sufficiently high. In all other cases, the structures important to safety were sealed for water tightness and were built with waterproof concrete. Furthermore, the openings (e.g. doors) are located above the level of the highest expected flood. If these permanent protective measures should not be sufficient, mobile barriers are available to seal the openings.

Review by the regulatory authority for licensing

After the applicant had pre-selected a site, a regional planning procedure was initiated which preceded the nuclear licensing procedure. This took into account all impacts of the individual project on the public, on traffic ways, regional development, landscape protection and nature conservation. Besides the site characteristics, the design of the nuclear installation against external hazards was checked in the nuclear licensing procedure.

Reevaluation of the site-related factors

The safety reviews which have to be performed every ten years as required by sect 19a of the Atomic Energy Act also include a reevaluation of the protective measures against external hazards, considering the development of the state of the art. In the case of flooding, the safety standard [KTA 2207] /3.1/ was applied. As a result of these reviews, measures have been taken or planned as far as necessary.

3.1 Design basis

3.1.1 Flooding against which the plants are designed

The sites of German NPPs are all located in areas near rivers. Most of German NPPs are located at inland rivers sites. There is no coastal site, but some NPPs are sited on rivers with tidal influence (KKB, KBR, KKK, and KKU).

A site specific flood hazard assessment is required for NPP sites in Germany according to the nuclear safety standard KTA 2207 /3.1/. This safety standard distinguishes between tide influenced sites and river sites. For both types of sites specific methods for the hazard assessment are stipulated. The design basis flood level is defined to be the flood with an exceedance probability of 10^{-4}/year.

In the case of sites on inland rivers, the decisive variable for determining the design-basis water levels are based on a flood runoff from a flood with a probability value of 10^{-4}/year.

In the case of coastal site and sites on tidal rivers the determination of the design-basis water levels are based on a storm-tide water level with a probability value of 10^{-4}/year /3.1/ (exception is KKK where the tidal influence is small in comparison with inland river influence).

The site specific hazard assessment and the designs of all German nuclear power plants conform to KTA 2207.

Tsunamis in the German Bight are known to be small. The usual measures against storm surges provide appropriate protection. Therefore, the hazard due to tsunamis can be neglected for the NPP sites at rivers with tidal influence.

The information listed in the table below is a brief compilation of the main aspects of the licensees' answers to the ENSREG questions. A comprehensive evaluation of the safety status of the NPPs is possible on the basis of the complete information provided by the licensees only.

Table 3-1: Characteristics of the DBF

NPP	Characteristics of the DBF	Protection height
Schleswig-Holstein		
KKB	h_{DBF}: +7.5 m MSL p: 10^{-4}/year reassessments of the DBF (latest re-evaluation in 2007) reevaluation of the flood design in 2001	overall protection height: +8.45 m MSL (dyke in front of the plant) nearby dykes are lower with +8.20 m MSL postulated abrupt dyke failure and DBF (hypothetic) => max. water level +4.88 m MSL local at the reactor building on the dyke site (for a short time, afterwards +3.39 m MSL at the whole site)
KBR	h_{DBF}: +7.16 m MSL p: 10^{-4}/year reassessment of the DBF in 2006	overall protection height: +8.70 m MSL (necessary dyke height = +8.40 m MSL plus 0.3 m safety margin for subsidience)
KKK	h_{DBF}: +8.74…+9.63 m MSL p: 10^{-4}/year reassessment of the DBF in 2008	overall protection height: +9.70 m MSL
Lower Saxony		
KKU	h_{DBF}: +7.06 m MSL p: 10^{-4}/year latest reassessment of the DBF 2007	overall protection height: +7.34…+8.04 m MSL (dyke)
KKE	h_{DBF}: +24.55 m MSL	overall protection height: +31.15 m MSL (plant area level) due to the topography of the site flooding can physically be excluded
KWG	h_{DBF}: +73 m MSL p: 10^{-4}/year	overall protection height: +73.6 m MSL
Hesse		
KWB-A	h_{DBF}: +91.5 m MSL p: 10^{-4}/year	safety-related buildings were designed with DBF +92.5 m MSL (p =

NPP	Characteristics of the DBF	Protection height
	latest reassessment in 2011 confirmed the DBF	10^{-3}/year) DBF 10^{-4}/year is lower than flood with p = 10^{-3}/year due to broken dykes and water disperse in the surrounding
KWB-B	h_{DBF}: +91.5 m MSL p: 10^{-4}/year latest reassessment in 2011 confirmed the DBF	safety-related buildings were designed with DBF +92.5 m MSL (p = 10^{-3}/year) DBF 10^{-4}/year is lower than flood with p = 10^{-3}/year due to broken dykes and water disperse in the surrounding
Baden-Württemberg		
KWO	h_{DBF}: +142 m MSL p: 10^{-4}/year reassessments of the discharge in 2011	overall protection height against flood: +144 m MSL (grade level)
KKP 1	h_{DBF}: +99.9 m MSL p: 10^{-4}/year reassessments in 2009 lead to a new extreme beyond design flood with +100.6 m MSL due to a special dyke failure; therefore +101.1 m MSL with p = 10^{-6}/year will be regarded in future for BDBF	overall protection height against flood: +101.1 m MSL safety is also ensured w. r. t. the newly defined extreme flood
KKP 2	h_{DBF}: +99.9 m MSL p: 10^{-4}/year reassessments in 2009 lead to a new extreme beyond design flood with +100.6 m MSL due to a special dyke failure; therefore +101.1 m MSL with p = 10^{-6}/year will be regarded in future for BDBF	overall protection height against flood: +102.05 m MSL safety is also ensured w. r. t. the newly defined extreme flood
GKN-I	h_{DBF}: +172.66 m MSL p: 10^{-4}/year latest reassessment in 2007	overall protection height of buildings: +173.5 m MSL (equivalent to P = 10^{-5}/year)
GKN-II	h_{DBF}: +172.66 m MSL p: 10^{-4}/year latest reassessment in 2007	overall protection height of buildings: +173.5 m MSL (equivalent to P = 10^{-5}/year)
Bavaria		
KKG	h_{DBF}: +205.82 m MSL	overall protection height of buildings:

NPP	Characteristics of the DBF	Protection height
	p: 10^{-4}/year reassessments confirm the adequacy of the safety design against flood	+206.6 m MSL
KKI-1	h_{DBF}: +374.32 m MSL p: 10^{-4}/year reassessments confirm the adequacy of the safety design against flood	overall protection height of buildings: +375.5 m MSL
KKI-2	h_{DBF}: +374.93 m MSL p: 10^{-4}/year reassessments confirm the adequacy of the safety design against flood	overall protection height of buildings: +375.5 m MSL
KRB-II-B	h_{DBF}: +433.33 m MSL p: 10^{-4}/year	overall protection height against flood is +434.5 m MSL
KRB-II-C	h_{DBF}: +433.33 m MSL p: 10^{-4}/year	overall protection height against flood is +434.5 m MSL

3.1.2 Provisions to protect the plants against the design basis flood

The German concept of protection against flood is based on preventive measures like grade elevation, structural protection and physical separation of necessary unit components. Additionally some plants provide special temporary measures (for limited areas of the plant) for the DBF event.

The structural protection measures are supplemented by administrative measures. The corresponding procedures are described in the operating manuals of the plants. Administrative measures typically include monitoring of the water level, inspections of flood protection measures during flood situations, supply of additional resources (e. g. personnel and working materials), and shutdown of the plant (given certain water levels).

To be able to initiate the installation of temporary structural measures and the necessary administrative measures in time, the plants utilise regional or national flood alert systems.

The information listed in the table below is a brief compilation of the main aspects of the licensees' answers to the ENSREG questions. A comprehensive evaluation of the safety status of the NPPs is possible on the basis of the complete information provided by the licensees only.

Table 3-2: Protection against DBF

NPP	Permanent measures	Temporary Measures	Relevant aspects taken into account (but not necessarily relevant for the plant)
Schleswig-Holstein			
KKB	grade elevation: +3 m MSL accesses of safety-related buildings at a height of > +6 m MSL dyke: +8.45 m MSL	dam boards/ stop logs: intake building on the river Elbe railway gates closing of doors and other openings closing of valves	postulated abrupt dyke failure Tsunami risk: maximum wave height 0.5…1 m heavy rainfall secular sea level rise subsidence failure of power supply flotsam, biomass, oil
KBR	Grade elevation: +1.5 m MSL protection height of safety-related buildings: +4.3 m MSL dyke: +8.7 m MSL dyke in front of the plant is more robust than nearby dykes	flooding of turbine building	failures of nearby dykes Tsunami risk: maximum wave height 0.5…1 m safety margin for subsidence of the dyke: 0.3 m above necessary dyke height of 8.4 m MSL potential for buoying upwards of buildings (turbine building) water penetration in buildings loss of offsite power
KKK	grade elevation: +8.5 m MSL outdoor switchyard at +60 m MSL	graded measures to protect the plant area up to +9.7 m MSL	dyke failure rise rate of the river Elbe ice flood buoying upwards of buildings and cable trays
Lower Saxony			
KKU	grade elevation: +1.8 m MSL dyke: +7.34…+8.04 m MSL protected components at +4 m MSL flood protection doors	not necessary controlled flooding of basement of switchgear building	abrupt dyke failure wave surge: 0.75 m stability of dyke during earthquake Tsunami risk: maximum wave height ≤1 m potential for buoying up-

NPP	Permanent measures	Temporary Measures	Relevant aspects taken into account (but not necessarily relevant for the plant)
	dyke in front of the plant is more robust than nearby dykes		wards of buildings (turbine building, switchgear building) blockage of cooling water intake failure of main heat sink loss of offsite power
KKE	grade elevation: +31.15 m MSL service floors of service water buildings are at height +24.8 m MSL	not necessary due to the grade elevation	pressing water heat removal via cell-cooling towers without external water supply (for BDBF) operability of service water intake systems up to the level of the DBE loss of offsite power
KWG	plant grade level: +72.2 m MSL accesses and escape routes have a minimum height of +73.6 m MSL access of emergency feed water building at height +74.4 m MSL	flood bridges can be built up for better accessibility of all important buildings measures for safeguarding of infrastructure and buildings which are not safety related	buoying upwards of buildings penetrations below the level of access doors are waterproof emergency service water pumps designed as submersible pumps loss of offsite power
Hesse			
KWB-A	grade elevation: +91 m MSL = 3 m higher than the surroundings	dam boards/ stop logs	factors caused by weather (ice flood, snowmelt) heavy rainfall failure of a upstream dam flotsam loss of offsite power watercrafts and helicopters to reach the plant
KWB-B	grade elevation: +91 m MSL = 3 m higher than the surroundings	dam boards/ stop logs	factors caused by weather (ice flood, snowmelt) heavy rainfall failure of a upstream dam

NPP	Permanent measures	Temporary Measures	Relevant aspects taken into account (but not necessarily relevant for the plant)
			flotsam loss of offsite power watercrafts and helicopters to reach the plant
Baden-Württemberg			
KWO	grade elevation: +144 m MSL reinforced concrete basement floor and walls of the emergency building serve as passive flood protection heat removal via multiple-cell cooling tower, no need of river water	not necessary	combination of precipitation with snowmelt buoying upwards of building structures loss of offsite power pressing water
KKP 1	grade elevation: +100.3 m MSL building doors ≥ +100.45 m MSL dyke: +100.5 m MSL	not necessary	ice flood, snowmelt, wind surge, wave surge, dam failure, heavy rainfall, combination of precipitation with snowmelt flotsam, debris failure of heat removal to the river Rhine groundwater buoying upwards of building structures island situation due to extreme flood dyke failures loss of offsite power
KKP 2	grade elevation: +100.3 m MSL building doors ≥ +100.45 m MSL dyke: +100.5 m MSL overall protection height +102.05 m MSL with permanent civil engineering	not necessary	ice flood, snowmelt, wind surge, wave surge, dam failure, heavy rainfall, combination of precipitation with snowmelt flotsam, debris failure of heat removal to the river Rhine groundwater

NPP	Permanent measures	Temporary Measures	Relevant aspects taken into account (but not necessarily relevant for the plant)
	measures		buoying upwards of building structures island situation due to extreme flood dyke failures loss of offsite power
GKN-I	grade elevation: +172.5 m MSL	dam boards/ bulkheads	all potential factors causing floods at the site are considered (snowmelt, wind surge, wave surge, dam failure) combination of precipitation with snowmelt flotsam, debris pressing water buoying upwards of building structures loss of offsite power
GKN-II	grade elevation: +172.5 m MSL	dam boards/ bulkheads	all potential factors causing floods at the site are considered (snowmelt, wind surge, wave surge, dam failure) combination of precipitation with snowmelt flotsam, debris pressing water buoying upwards of building structures loss of offsite power
Bavaria			
KKG	grade elevation: +206.5 m MSL (3 m higher than the surrounding area) building doors at +206.6 m MSL	not necessary	debris dam failure
KKI-1	grade elevation: +375.4 m MSL (3.5 m higher than the sur-	not necessary	loss of offsite power flood due to dam failure

NPP	Permanent measures	Temporary Measures	Relevant aspects taken into account (but not necessarily relevant for the plant)
	rounding area) building doors at +375.5 m MSL		airborne supply with operating material
KKI-2	grade elevation: +375.4 m MSL (3.5 m higher than the surrounding area) building doors at +375.5 m MSL	not necessary	flotsam, debris failure of a watergate loss of offsite power airborne supply with operating material
KRB-II-B	grade elevation: +433 m MSL building doors at +434.5 m MSL safety related buildings need no temporary measures	dam boards/ stop logs	dam failure loss of offsite power
KRB-II-C	grade elevation: +433 m MSL building doors at +434.5 m MSL safety related buildings need no temporary measures	dam boards/ stop logs	dam failure loss of offsite power

3.1.3 Plants compliance with its current licensing basis

Maintenance and inspections

To verify that the German NPPs conform to the licensing basis, independent TSOs are involved in the regulatory supervision process on behalf of the regulatory authority. These TSOs e. g. participate in selected periodic testing, perform inspections in the plants and review technical documents submitted to the authority.

Details on monitoring, periodic testing, and maintenance are stipulated in the inspection manual and the operating manual of the plant. Safety related sections of these documents have to be approved by the authority.

A graded supervision process (for minor changes that do not involve safety related equipment an approval by the authority is not required; for changes with potential effects on the safety status of the plant approval by the authority is mandatory) ensures that plant modifications do not impair the overall safety of the plant and the protection against external hazards.

In the framework of the periodic safety reviews that have to be performed every 10 years, also the protection of the plants against external hazards is reviewed.

Availability of mobile equipment

The fact that the DBF is a design basis accident implies that no mobile equipment or accident management measures are necessary to control this event (temporary measures here are not regarded). If mobile equipment is provided for accident management measures in case of beyond design basis events, this equipment is subject to periodic testing.

All plants have contracts with AREVA and the “Kerntechnische Hilfsdienst GmbH” (radiation protection, decontamination, and robot devices) to ensure additional support in case of emergencies.

Known deviations

No current deviations regarding the necessary protection against flooding are known. If such deviations occur, these are dealt with in the framework of the regulatory oversight procedure. If necessary, appropriate measures are applied.

Compliance checks after Fukushima accident

Besides the countrywide safety review after the Fukushima accident (RSK Sicherheitsüberprüfung) that aimed at an evaluation of the robustness of the German NPPs w. r. t. beyond design basis events, some Länder have performed additional safety reviews focusing on different safety aspects.

3.2 Evaluation of safety margins

3.2.1 Estimation of safety margin against flooding

All German NPPs have safety margins against flooding. With permanent and temporary measures they reach protection heights above the level of their 10^{-4}/year design basis flood event.

No realistic cliff edge effects have been identified, because the necessary water volumes for such scenarios are physically not possible in Germany. Respectively, dyke failures would lead to discharge of large water volumes into retention areas before the water level can reach relevant heights above the h_{DBF} at the sites.

At tide influenced sites, in particular the influence of the tides practically limits the time during which high water levels are present at the site and consequently the loads on the flood protection measures.

The information listed in the table below is a brief compilation of the main aspects of the licensees’ answers to the ENSREG questions. A comprehensive evaluation of the safety status of the NPPs is possible on the basis of the complete information provided by the licensees only.

Table 3-3: Safety margins against DBF

NPP	safety margins
Schleswig-Holstein	
KKB	0.95 m between h_{DBF} and dyke height in case of a postulated dyke failure: the outer wall of the reactor building is flooded up to ≤ +4.88 m MSL (for a short period of time), plant area is maximum flooded till +3.39 m MSL, structural design of buildings protects against flood levels of +6 m MSL (flood level +6 m MSL can physically be excluded) => 1.12 m safety margin for the reactor building => 2.7 m for other buildings
KBR	1.54 m between h_{DBF} and dyke height in case of a postulated dyke failure of near-by dykes: plant area is flooded up to +2.85 m MSL (1.35 m water level on the site area, 1.5 m MSL grade elevation) structural design of buildings protects against flood levels of +4.3 m MSL => 1.45 m safety margin structural design of emergency feedwater building protects against flood levels of +5.0 m MSL => 2.15 m safety margin
KKK	flood protection up to +9.7 m MSL (temporary measures) maximum flood level is +8.74…+9.63 m MSL (flood level +9.7 m MSL can physically be excluded, because of lower dykes upstream the river Elbe on the side of Lower Saxony) => 0.07…0.96 m safety margin
Lower Saxony	
KKU	0.28…0.98 m between h_{DBF} and dyke heights in case of a postulated dyke failure of near-by dykes: plant area is flooded up to +3.14 m MSL, structural design of buildings protect against flood level of +4.0 m MSL => 0.86 m safety margin
KKE	6.6 m between h_{DBF} and grade elevation
KWG	0.6 m between h_{DBF} (+73 m MSL) and protection height (+73.6 m MSL) 0.1 m safety margin even for a 10^{-5} flood event
Hesse	
KWB-A	1m between maximum assumed possible water level (+91.5 m MSL) and protection height of buildings (+92.5 m MSL), flood level +92.5 m MSL can physically be excluded
KWB-B	1m between maximum assumed possible water level (+91.5 m MSL) and protection height of buildings (+92.5 m MSL), flood level +92.5 m MSL can physically be excluded

NPP	safety margins
Baden-Württemberg	
KWO	2 m between h_{DBF} and the grade level
KKP 1	0.4 m between h_{DBF} and grade level (+100.3 m MSL) 0.55 m between h_{DBF} and building doors additional flood protection by the dyke (+100.5 m MSL) flood protection is also ensured in case of a beyond design flood up to +101.1 m MSL (p = 10^{-5}/a) additional protection for accesses, USUS-building, and REWAS-well in case of BDBF
KKP 2	0.4 m between h_{DBF} and grade level (+100.3 m MSL) 0.55 m between h_{DBF} and building doors, 2.15 m between h_{DBF} and the accesses doors of safety related buildings (+102.05 m MSL) additional flood protection by the dyke (+100.5 m MSL) flood protection is also ensured in case of a beyond design flood up to +101.1 m MSL (p = 10^{-5}/a)
GKN-I	0.84 m between h_{DBF} and overall protection height overall protection height would equal a flood event with p = 10^{-5}/a overall protection height protects against twice the discharge of the most extreme historic flood in 1824
GKN-II	0.84 m between h_{DBF} and overall protection height overall protection height would equal a flood event with p = 10^{-5}/a overall protection height protects against twice the discharge of the most extreme historic flood in 1824
Bavaria	
KKG	0.7 m between h_{DBF} (+205.82 m MSL) and grade level (+206.5 m MSL) 0.8 m between h_{DBF} and building doors 2.5 m between h_{DBF} and access doors of the emergency diesel generator building
KKI-1	1.08 m between h_{DBF} (+374.32 m MSL) and grade level (+375.4 m MSL) 1.18 m between h_{DBF} and building doors (+375.5 m MSL)
KKI-2	0.47 m between h_{DBF} (+374.93 m MSL) and grade level (+375.4 m MSL) 0.57 m between h_{DBF} and building doors (+375.5 m MSL) 2.07 m between h_{DBF} and access to the essential service water pump building (+377 m MSL) 3.57 m between h_{DBF} and access to the emergency feedwater building (+378.5 m MSL)

NPP	safety margins
	0.12 m between a BDBF with exceedance probability of p = 10^{-6}/a (+375.28 m MSL) and grade level additional measures for sealing doors and openings in case of BDBF
KRB-II-B	1.17 m between h_{DBF} (+433.33 m MSL) and building doors (+434.5 m MSL), floods ≥ +434.5 m MSL can physically be excluded
KRB-II-C	1.17 m between h_{DBF} (+433.33 m MSL) and building doors (+434.5 m MSL), floods ≥ +434.5 m MSL can physically be excluded

3.2.2 Measures which can be envisaged to increase robustness of the plants against flooding

Some plants have listed additional available measures in form of temporary measures or mobile equipment.

The large already existing safety margins for most plants (in particular at inland river sites) are considered appropriate; no additional measures are envisaged for the future to further increase the robustness of the plants.

Three of the four tide influenced plants (KBR, KKK, KKU) have identified possible additional protective measures to increase robustness of their plants against flooding.

KBR: Plans for an increase of the overall protection height for individual buildings have been submitted (already implemented for the emergency feedwater building). The robustness of the pumps used for water supply to the feed-water tank will be enhanced. Spare parts for the emergency and RHR systems will be stored in a flood protected location.

KKK: Temporary flood protection of safety related buildings will be changed into permanent protection measures.

KKU: The dyke height will be increased up to +10 m MSL. Temporary measures are planned to increase the protection height of emergency systems.

3.3 Assessment and conclusions of the German regulatory body

3.3.1 Status of the documents presented by the licensees

The documents that are the basis for the assessment have been classified by the licensees according to their degree of approval in the regulatory process. The Länder authorities in general confirm the appropriateness of the classification. Differing classifications that occurred in some cases have no influence on the overall validity of the assessments.

3.3.2 Assessment of the regulator

The Länder authorities confirm that the reports of the licensees essentially conform to the ENSREG requirements. However, due to the tight schedule of the stress test detailed assessments of safety margins were not always feasible.

The Länder authorities basically confirm the information and assessments provided by the licensees. This holds in particular for the information regarding the licensing basis. In general, the assessments of safety margins are plausible, but cannot be verified in line with the normal regulatory standards.

For the following plants additional statements are given by the Länder:KKB: (1) The licensee reports a grade level of +3 m MSL (c. f. Sec. 3.1.2) whereas the regulatory authority can only confirm a grade elevation between +2.2 m MSL and +2.9 m MSL. The consequences of this deviation for the overall flood protection have to be analysed by the licensee. If necessary, additional flood protection measures have to be envisaged. (2) The level of +6.00 m MSL for the flood protection heights holds for the safety related buildings at the KKB site with exception of the emergency diesel generator building that has a protection height of +4.00 m MSL only. (3) The site is protected by a high grade level and the “Landesschutzdeich” (state protection dyke). In case of a dyke failure during a 10^{-4}/a flood event, a water level of +3.39 m MSL is expected at the site.

KWB: The regulatory authority argues for the case that the provided measures against the DBF (installation of dam boards) are not performed in accordance with the operation manual should be further considered during the assessment of the robustness of the plant against flooding.

GKN and KKP: Measures for low power shutdown states and the cooling of the spent fuel pool are to be complemented as part of the Accident Management, see Chapter 6.

As for the fulfilment of the robustness criteria regarding impacts caused by flooding, the assessment by the RSK showed for all plants that there are significant design margins with respect to the 10.000-yearly flood postulated according to the current state of the art in science and technology. The extent of these margins differs from plant to plant.

3.3.3 Conclusions

Major differences between the licensee’s report and the assessment of the regulator were found for one plant only, but do not endanger the robustness of this plant as described.

According to the results in most of the plants no additional measures are necessary. Some plants consider improvements to further reduce risk. These will be regulated within the routine oversight process.

References

/3.1/ Kerntechnischer Ausschuss (KTA)
KTA-Regel 2207 „Schutz von Kernkraftwerken gegen Hochwasser“, Fassung November 2004

/3.2/ Sicherheitskriterien für Kernkraftwerke vom 21. Oktober 1977 (BAnz. 1977, Nr. 206)

/3.3/ RSK-Leitlinien für Druckwasserreaktoren
3. Ausgabe vom 14. Oktober 1981 (BAnz. 1982, Nr. 69a) mit den Änderungen: in Abschnitt 21.1 (BAnz. 1984, Nr. 104), in Abschnitt 21.2 (BAnz. 1983, Nr. 106) und in Abschnitt 7 (BAnz. 1996, Nr. 158a) mit Berichtigung (BAnz. 1996, Nr. 214) und den Anhängen vom 25. April 1979 zu Kapitel 4.2 der 2. Ausgabe der RSK-LL vom 24. Januar 1979 (BAnz. 1979, Nr. 167a)
Anhang 1: Auflistung der Systeme und Komponenten, auf die die Rahmenspezifikation Basissicherheit von druckführenden Komponenten anzuwenden ist
Anhang 2: Rahmenspezifikation Basissicherheit; Basissicherheit von druckführenden Komponenten: Behälter, Apparate, Rohrleitungen, Pumpen und Armaturen (ausgenommen: Einbauteile, Bauteile zur Kraftübertragung und druckführende Wandungen < DN 50)

/3.4/ Leitlinien zur Beurteilung der Auslegung von Kernkraftwerken mit Druckwasserreaktoren gegen Störfälle im Sinne des § 28 Abs. 3 StrlSchV (Störfall-Leitlinien) vom 18. Oktober 1983 (BAnz. 1983, Nr. 245a)

4 Extreme weather conditions and other initiating events conceivable at the plant site

Besides the design against the major natural external hazards ‘earthquake’ and ‘flooding’ the German NPPs have been designed to withstand a broad spectrum of other natural and man-made hazards. Whereas the design against meteorological hazards such as high winds and snow loads typically relies on conventional civil engineering standards, dedicated nuclear standards or guidelines exist for lightning /4.1/, pressure waves from chemical explosions /4.2/, hazardous gases /4.3/, and aircraft crashes /4.4/.

4.1 Design basis

Typically the following natural hazards are considered in addition to earthquakes and flooding:

- wind,
- precipitation,
- snow,
- temperatures,
- low water levels,
- lightning.

Loads from hail are covered by the design against precipitation and snow.

Wind

The design of the buildings against wind loads is primarily based on conventional civil engineering standards, in particular DIN standards (DIN 1055-4 /4.5/, meanwhile amended to conform to Eurocode 1). These conventional standards typically aim at loads from events with an exceedance probability of $2 \cdot 10^{-2}$/a. Additional the design against pressure waves, earthquakes, and aircraft crashes covers loads from very extreme events with wind speeds of up to 240…790 km/h (depending on the design details). The design of individual systems generally depends on system specific requirements.

Plant-specific aspects:

- KWO has been designed according to the rules and regulations applicable at the time of construction (detailed information not provided).
- KKP 2 additional mentioned DIN 25449 /4.6/ (nuclear specific requirements with regard to reinforced concrete structures).
- GKN-I and GKN-II provide no specific details in the final report.

Precipitation

Hazards from heavy precipitation are covered by the design against flooding. Static loads are additionally covered by the design against pressure waves and in parts by the design against earthquakes and aircraft crashes.

Plant-specific aspects:

- KWB, KWO, GKN provide no specific details in the final report.
- KKP has designed its drainage system against rainfall events with 156 l/s·ha. In case of a beyond design basis precipitation event, water can flow from the elevated KKP site into the lower surroundings.
- KRB has no specific design in excess of the flood protection, because no exceptional loads are expected from precipitation events.

Snow

The design of the buildings against snow loads is primarily base on conventional civil engineering standards, such as DIN standards (DIN 1055-5 /4.7/, meanwhile amended to conform to Eurocode 1). Additionally, the design against pressure waves, earthquakes, and aircraft crashes covers loads from very extreme events.

Plant-specific aspects:

- KBR, KKK, KKB state that snow loads are covered by the design against pressure wave, earthquakes, and aircraft crashes.
- KKU state that snow loads are covered by the design against precipitation.
- GKN provides no specific details in the final report.
- KWG states that snow loads are covered by the design against pressure waves, earthquakes, and aircraft crashes.
- KWO has been designed according to the rules and regulations applicable at the time of construction (detailed information not available).
- KKP, KKG, KKI mention that the design against earthquakes and pressure waves, and aircraft crashes provides additional robustness w. r. t. snow loads.
- KRB-II-B and KRB-II-C have heated roof water discharges.

Temperatures

The issue of extreme temperatures can be split into several sub-issues:

- high and low ambient air temperatures,
- high and low river / sea water temperatures, and
- icing.

As far as information has been provided by the licensees, all these sub-issues are addressed in this section.

Most plants refer to system specific designs to deal with extreme temperatures. The major limitation to the operation of NPPs during heat waves in Germany is the water utilisation rule (concerning nature conservation) that limits the allowable warm water discharge to rivers. To cope with very low temperatures, most plants in Germany are equipped with systems allowing a recirculation of warm (discharge) cooling water to the cooling water intake. This measure provides protection against icing of the cooling water intake structures.

The information listed in the table below is a brief compilation of the main aspects of the licensees' answers to the ENSREG questions. A comprehensive evaluation of the safety status of the NPPs is possible on the basis of the complete information provided by the licensees only.

Table 4-1: Design regarding extreme weather conditions

NPP	Design
Schleswig-Holstein	
KKB	system specific design covers the ambient air temperature range from -35 to +40 °C (at 30 % humidity) diesel generators designed for cooling water temperatures up to 29 °C; for river water temperatures ≥ 29°C shutdown following instruction in the operating manual loads from icing covered by design against snow loads and pressure waves
KBR	system specific design covers the ambient air temperature range from -31 to +37 °C; low temperatures ≤ 2 °C: recirculation of warm cooling water into the intake structure (procedure described in the operation manual); shutdown (hot standby) following instruction in the operating manual if this is not sufficient; safety systems designed for service water temperatures up to 26 °C (recent verification for 28 °C)
KKK	system specific design covers the ambient air temperature range from -35 to +40 °C (at 30 % humidity); RHR and service water systems designed for service water temperatures up to 25 °C; residual-heat removal system and emergency diesel available for service water temperatures up to 30 °C; low temperatures ≤ 5 °C: recirculation of warm cooling water into the intake structure (procedure described in the operation manual); loads from icing covered by design against snow loads and pressure waves
Lower Saxony	
KKU	system specific design covers the ambient air temperature range from -31 °C to +37 °C; RHR and emergency diesel designed for service water temperatures up to 28 °C; low temperatures: recirculation of warm cooling water into the intake
KKE	system specific design covers ambient air temperatures up to +40 °C (at

NPP	Design
	30 % humidity); measures to deal with extreme temperatures described in the operation manual in the section “Frost control measures”
KWG	System specific design covers the ambient air temperature up to +36 °C (recent verification for 38 °C) high temperatures: safety systems designed for service water temperatures up to 26 °C (recent verification for 28 °C), shutdown if temperatures reaches 28 °C; low temperatures: recirculation of warm cooling water into the intake
Hesse	
KWB-A	system specific design covers the ambient air temperature up to +39 °C; RHR for LOCA available for service water temperatures up to 30.8 °C, shutdown if temperatures reaches 28 °C low temperatures < 6 °C: recirculation of warm cooling water into the intake; measures to deal with extreme temperatures described in the operation manual
KWB-B	system specific design covers the ambient air temperature up to +39 °C; RHR for LOCA available for service water temperatures up to 30.8 °C, shutdown if temperatures reaches 28 °C low temperatures < 6 °C: recirculation of warm cooling water into the intake; measures to deal with extreme temperatures described in the operation manual
Baden-Württemberg	
KWO	loads from extreme temperatures covered by the design against earthquakes, flooding, aircraft crashes, and pressure waves
KKP 1	site specific design; (cold) shutdown required for river water temperatures above 29 °C; design conforms to KTA 3301 /4.8/ (w. r. t. cooling water) and DIN 4701 /4.9/ (w. r. t. air temperature); for low air temperatures there is a dedicated work instruction “Frost control measures” (B1 043)
KKP 2	site specific design; design conforms to DIN 4701 /4.9/ (w. r. t. air temperature); service water system designed for service water temperatures up to 25 °C for low air temperatures there is a dedicated work instruction “Frost control measures” (B1 043)
GKN-I	analyses for service water temperatures up to 30 °C available for RHR
GKN-II	analyses for service water temperatures up to 31 °C available for RHR
Bavaria	
KKG	high temperatures: design for ambient air temperature up to 36 °C (recent verification for 40 °C), safety systems designed for service water tempera-

NPP	Design
	tures up to 26 °C (recent verification for 28 °C); low temperatures: ice protection structures at the cooling water inlet, recirculation of warm cooling water into the intake structure, measures described in the operation manual
KKI-1	high temperatures: safety systems designed for service water temperatures up to 23 °C (recent verification for 29 °C), shutdown following instruction in the operating manual; low temperatures: recirculation of warm cooling water into the intake structure (procedure described in the operation manual)
KKI-2	high temperatures: safety systems designed for service water temperatures up to 28 °C; low temperatures: recirculation of warm cooling water into the intake structure
KRB-II-B	low temperatures: recirculation of warm cooling water into the intake structure, service water screening system located in heated building, wet cell-type cooling tower partially heated; high temperatures: safety systems designed for service water temperatures up to 23.5 °C, full power operation possible for river water temperatures up to 25 °C according to recent analyses; emergency diesel generators: intake air temperature ≤ 30 °C, river water temperature ≤ 22 °C emergency diesel generators (AHRS): intake air temperature ≤ 35 °C, river water temperature ≤ 28 °C
KRB-II-C	high temperatures: safety systems designed for service water temperatures up to 23.5 °C, full power operation possible for river water temperatures up to 25 °C according to recent analyses; emergency diesel generators: intake air temperature ≤ 30 °C, river water temperature ≤ 22 °C; emergency diesel generators (AHRS): intake air temperature ≤ 35 °C, river water temperature ≤ 28 °C; low temperatures: recirculation of warm cooling water into the intake structure, service water screening system located in heated building, wet cell-type cooling tower partially heated

Low water levels

Low water levels are considered in the design of the intake buildings. The plants have cooling concepts in case of a decrease of water in the river and special designs to deal with the possible increase of flotsam in the rivers. The general concepts to deal with a loss of primary ultimate heat sink are discussed in Chapter 5.

The information listed in the table below is a brief compilation of the main aspects of the licensees' answers to the ENSREG questions. A comprehensive evaluation of the safety status of the NPPs is possible on the basis of the complete information provided by the licensees only.

Table 4-2: Design regarding low water level

NPP	Design
Schleswig-Holstein	
KKB	system specific design provisions; low water levels covered by the design against “Loss of primary ultimate heat sink for essential service water”
KBR	system specific design provisions; low water levels covered by the design against “Loss of primary ultimate heat sink for essential service water”
KKK	system specific design provisions; low water levels covered by the design against “Loss of primary ultimate heat sink for essential service water”
Lower Saxony	
KKU	system specific design provisions; low water levels covered by the design against “Loss of primary ultimate heat sink for essential service water”
KKE	procedures described in the operating manual for the event of a loss of the downstream dam (“Wehr Hanekenfähr”)
KWG	system specific design provisions; low water levels covered by the design against “Loss of primary ultimate heat sink for essential service water”
Hesse	
KWB-A	shut down and transition to residual heat removal mode
KWB-B	shut down and transition to residual heat removal mode
Baden-Württemberg	
KWO	no specific information is provided in the final report since river water is not used for heat removal
KKP 1	measures are available to provide water supply via a water well in case of total loss of river water supply
KKP 2	water supply is ensured also in case of extremely low river water levels due to the low lying intake
GKN-I	procedures described in the operating manual to provide water supply via water wells and immersion pumps
GKN-II	due to the location of the emergency service water pumps (4.40 m below normal river water level) water supply is ensured also for extremely low river water levels; the essential service water supply is independent from the river (cell coolers)
Bavaria	
KKG	plant specific design provisions; due to the low lying cooling water intake water supply is ensured also for extremely low river water levels, measures are stipulated in the plant operating manual; low water levels are covered by the design against “Loss of primary ultimate heat sink for essential service water”

NPP	Design
KKI-1	in case of very low water levels water can be extracted at the deepest point of the dam lake (measure according to plant operating manual), low water levels are covered by the design against “Loss of primary ultimate heat sink for essential service water”
KKI-2	water needed for safety systems is available on site, measures are stipulated in the plant operating manual; low water levels are covered by the design against “Loss of primary ultimate heat sink for essential service water”
KRB-II-B	measures are stipulated in the plant operating manual in case of damage to the downstream barrage, RHR possible with AHRS independent of river water level; icing is not a relevant hazard for the plant
KRB-II-C	measures are stipulated in the plant operation in case of damage to the downstream barrage, RHR possible with AHRS independent of river water level; icing is not a relevant hazard for the plant

Lightning

All plants are designed against hazards from lightning. Their designs basically conform to the nuclear safety standard KTA 2206 /4.1/. As this standard did not yet exist when the plants were built, not all plants fully conform to this standard. Nevertheless, the retrofitting measures initiated after this standard came into effect, improved the lightning protection significantly, so that after this point in time no major events related to lightning were reported. Besides this nuclear safety standard, also conventional standards were applied such as VDE 0185-305 (DIN EN 62305) /4.10/.

4.1.1 Reassessment of weather conditions used as design basis

Reassessments of extreme weather conditions are performed on a 10-year basis in the framework of the Periodic Safety Assessments. No new findings related to weather conditions were reported by the licensees.

4.2 Evaluation of safety margins

4.2.1 Estimation of safety margin against extreme weather conditions

All weather conditions which are important at the sites are considered in the design of the plant. The buildings have robust designs, providing protections against a wide range of extreme weather conditions. Where necessary, safety related systems were qualified to withstand specific loads from extreme weather conditions. The design against earthquake, flooding, explosion pressure waves, and aircraft crashes provides additional safety margins.

4.2.2 Measures which can be envisaged to increase robustness of the plants against extreme weather conditions

The licensees see no need for an increase of the general robustness of the plants against extreme weather conditions, because of the design against higher loads from earthquakes, explosion pressure wave and aircraft crash.

However, KKB and KKK mention specific measures for enhancements: KKB currently investigates measures to improve robustness against heavy rainfall events and KKK plans to implement improvements for the event “icing of ventilation openings of emergency diesel generators during extreme weather conditions”.

4.3 Assessment and conclusions of the German regulatory body

4.3.1 Status of the documents presented by the licensees

The documents that are the basis for the assessment have been classified by the licensees according to their degree of approval in the regulatory process. The Länder authorities in general confirm the appropriateness of the classification. Differing classifications that occurred in some cases have no influence on the overall validity of the assessments.

4.3.2 Assessment of the regulator

The Länder authorities confirm that the reports of the licensees essentially conform to the ENSREG requirements. However, due to the tight schedule of the stress test quantitative assessments of safety margins were not always feasible.

The Länder authorities basically confirm the information and assessments provided by the licensees. This holds in particular for the information regarding the licensing basis. In general, the assessments of safety margins are plausible, but cannot be verified in line with the normal regulatory standards.

For the following plants additional statements are given by the Länder:

KKB: In general, the regulatory authority confirms the information regarding the design against extreme weather conditions, but there are topics that need further investigation: (1) The potential effects of heavy rainfall events are under investigation due to recent operating experience. (2) The range of ambient air temperatures that can be dealt with by the air conditioning system is somewhat lower than claimed by the licensee: -30 °C (for several days) and 38 °C (for a few hours).

KWB: The regulatory authority confirms the licensees information regarding the design of KWB against extreme weather conditions with following remark: Due to existing open points from the periodic safety review the verification of the in plant lightning protection is not yet completed.

KKP and GKN: For those loads from extreme weather conditions that are covered by the design against earthquakes, aircraft crashes, and explosions, a high level of robustness is plausible. For systems not protected by building structures further assessments are necessary, including considerations regarding low power shutdown states and the spent fuel pool cooling system.

4.3.3 Conclusions

According to the results in most of the plants no additional measures are necessary. Some plants consider additional assessments and improvements to further reduce risk. These will be regulated within the routine oversight process.

BMU has initiated several research projects and specific assessments (carried out e. g. by RSK and GRS) to evaluate the potential impact of extreme weather conditions on German NPPs. Depending on the results of these activities regulatory actions (e. g. new requirements and revision of safety standards) will be considered to improve the safety of German NPPs.

4.4 Consequences of loss of safety functions from any initiating event conceivable at the plant site

In the technical scope of the ENSREG Declaration it is mentioned (page 4) that “Furthermore, the assessment of consequences of loss of safety functions is relevant also if the situation is provoked by indirect initiating events, for instance large disturbance from the electrical power grid impacting AC power distribution systems or forest fire, airplane crash”.

In this sense in the national RSK safety review man made hazards have been analysed. Based on this analysis the related procedure, results and insights are summarized in this chapter.

The following man made hazards have been considered in the RSK safety review:

- Aircraft crash
- Gas release including blast wave
- Terrorist attacks including attacks on computer-based controls and systems

In addition to the man made hazards also the effects of an

- impact of an accident in a power plant unit on the neighbouring unit

have been considered.

Catalogue of requirements for plant-specific reviews

The following catalogue of requirements, listed in keywords, was set up for the review. The catalogue refers to the entire reactor complex, including the fuel pools, and covers all operating conditions.

- Topic “aircraft crash”

Review of maintaining of the fundamental safety functions in case of commercial aircraft or military aircraft crash (accidental, deliberate) with consideration of the following aspects:

  - Crash scenarios taking into account aircraft type, speed, loading, impact location, etc.
  - Structural reserves in case of loads caused by aircraft impact
  - Mechanical impacts including impact of wreckage
  - Fuel fire effects
  - Effectiveness of spatial separation
  - Leak as consequential event (e.g. due to induced vibrations)
  - Feasibility and effectiveness of accident management measures with consideration of impacts on infrastructure and personnel

- Topic “gas release”

Review of the boundary conditions for the determination of the site-specific impacts caused by toxic and explosive gases and blast wave

- Topic “terrorist attacks”

Review of maintaining of the fundamental safety functions or accident management measures in case of

  - Loss of individual infrastructures or buildings (parts thereof)
  - Selective local destruction of systems

- Topic “external attacks on computer-based controls and systems”

Review of maintaining of the fundamental safety functions in case of external attacks on computer-based controls and systems

- Topic “impact of an accident in a power plant unit on the neighbouring unit”

Review of the impact of a beyond design basis event in a power plant unit on the neighbouring unit.

4.4.1 Aircraft crash

The protection measures against aircraft crash were taken against the background of the increasing number of nuclear power plants in Germany in the 1970s and a high crash rate of military aircraft in those years. The general basis was the analysis of the crash frequency (the occurrence probability for impacts on safety-relevant buildings was about 10^{-6}/a and plant) and of the loads on the reactor building that would be caused by such a crash. From the mid-1970s onwards, load assumptions were developed for the event of an aircraft crash which were then applied to the design of preventive measures in the newer nuclear power plants. In 1981, the Reactor Safety Commission (RSK) specified safety requirements for the event “aircraft crash” in the "RSK Guidelines for Pressurized Water Reactors" /4.4/ for assessing the design, construction and operation. The main load assumptions used for the design were a site-independent impact-load-over-time diagram with an impact time of 70 ms and a maximum impact load of 110 MN, a circular impact area of 7 m^2 and an impact angle assumed to be normal to the tangential plane at the point of impact.

These loads correspond to the impact of a fast-flying military aircraft of the Phantom type on a rigid wall and, in addition, cover a wide range of impact scenarios of aircraft of different types, size and velocities.

Further, it has been specified, among others, that the effects of missiles and burning kerosene as well as the shocks induced by the aircraft impact shall be considered in the design.

Of the 18 German nuclear power plants considered within the framework of the EU Stress Test the pressurised water reactors of the third and fourth construction line as well as the boiling water reactors of the type 72 and one boiling water reactor type 69 are designed against the event “aircraft crash” correspondingly with the "RSK Guidelines for Pressurized Water Reactors" /4.4/.

In the construction the pressurised water reactors of the construction line 2 and one boiling water reactor type 69 from 1971 onwards, the design against the event "aircraft crash" was guided by the military jet of the Starfighter type.

For the other plants there was no explicit design against an "aircraft crash" event when they were built. At the time, the design of nuclear power plants was guided by experience made abroad, especially in the US.

For the older plants, further studies regarding their load-shedding capacity were carried out in connection with probabilistic safety assessments at a later stage. It turned out as a result of the probabilistic assessments that even though the reactor buildings are not able to withstand the defined load assumptions, a sufficiently low risk can be assumed in the event of an aircraft crash especially due to the protective effects of adjacent buildings. A further minimisation of the risk was achieved in older plants by the installation at a later stage of emergency systems that are autonomous from a systems-engineering point of view and also physically separated.

Until the events of 11th September 2001, the design of the German nuclear power plants against the event "aircraft crash" (accidental aircraft crash) was based on the assumption that the probability of larger commercial airliners crashing was so low that

such accident scenarios could be left unconsidered. This had also been confirmed by risk assessments.

After the events of 11th September 2001, deliberate terrorist crashes of commercial airliners on nuclear power plants were also taken into consideration in Germany with regard to their potential effects. Hence, immediately after the events, the Federal Government's nuclear safety advisory organisation Gesellschaft für Anlagen- und Reaktorsicherheit (GRS) was tasked by the BMU to carry out comprehensive analyses of the risk of German nuclear power plants relating to the deliberate crash of such an aircraft.

In this context it had to be considered that the impact mass of such aircraft was much higher than that of a military aircraft and that correspondingly, depending on the assumed crash velocity, the impact energy may be much higher than the impact energy assumed as a basis for the load assumption in the RSK Guideline. Different damage mechanisms had to be considered (e.g. shear failure, bending failure, penetration of building walls) to determine the possible effects of an assumed aircraft crash.

In 2003, the operators of the German nuclear power plants reached an agreement to propose measures for the protection of all German nuclear power plants in operation against terrorist attacks using hijacked aircrafts. In addition to the extensive measures of aviation security, a concept was developed with the aim to reduce the success of a deliberate crash on a nuclear power plant by timely warning and alerting and visual obstruction (covering the plants with artificial fog). In subsequent years, the aviation security measures and the alarming concept for initiation of systems engineering measures (e.g. also including reactor scram) as early as possible have been implemented. For some sites, disguise by artificial fog has meanwhile also been installed.

Results of the RSK Safety Review

Immediately after the events in the Japanese Fukushima-I plant, the BMU asked the RSK on 17th March 2011 to draft a catalogue of requirements for a safety review of the German nuclear power plants and to assess the results of the reviews carried out on this basis. Against the background of the events at Fukushima-I, the plant-specific safety review (RSK-SÜ) of the German nuclear power plants yielded the following results with regard to the event "aircraft crash":

“In the RSK safety review, the assessment criteria for a postulated aircraft crash differ in three Degrees of Protection. Here, a difference is made between the mechanical impact (impact of the aircraft) and the thermal (kerosene fire) Degree of Protection according to the consideration of the crash of an aircraft comparable to a Starfighter (Degree of Protection 1), the load-time diagram of the RSK Guidelines (Phantom), or the crash of a medium-size commercial aircraft (Degree of Protection 2) and additionally of a large commercial aircraft (Degree of Protection 3).

Consequential mechanical effects due to an aircraft crash that lead to a limited loss of coolant, e.g. leaks in small pipes, have so far not been postulated and could not be assessed within the framework of this review. The RSK included this in its working programme and will deal with the resulting issues.

For all pre-Konvoi and Konvoi PWR plants as well as for the BWR plants KKK and KRB B/C, proof has been furnished that the requirements resulting from the load assumptions according to the RSK Guidelines (Phantom) are fulfilled (Degree of Protection 2).

As regards the crash of civil aircraft, further proof of its possible control has to be furnished for a confirmation of Degree of Protection 2 and 3.

For the KKU, KKI 1 and GKN-I plants, the criteria of Degree of Protection 1 are demonstrably fulfilled. To fulfil Degree of Protection 2, further proof is necessary; Degree of Protection 3 cannot be reached on the basis of the documents presented.

Regarding the KWB-A and B, KKB and KKP 1 plants, fulfilment of the mechanical Degree of Protection 1 – for KKB and KKP 1 also fulfilment of the thermal Degree of Protection 1 – depends on the presentation of further proof."

4.4.2 Gas release including blast waves and Toxic gases

The assessment on this topic has been subdivided since different issues are concerned that cannot be dealt with together.

- The blast wave is to be assumed directly at the buildings.
- The release of flammable gases may also have other impacts (e.g. on the service water, power supply installations).
- Toxic gases may have a different profile of detectability and effects.

Results of the RSK Safety Review

According to the BMI Safety Criteria, the entry of **explosive materials** into the plant has to be prevented. Here, the site-specific boundary conditions have to be taken into account. Having implemented measures to fulfil this requirement, all plants reach Degree of Protection 1. Against the background of the site-specific conditions, however, the plant-specific implementations of these protection measures differ from each other. As regards an isolation of the ventilation system upon a gas alarm, automatic ventilation isolation is implemented in the KBR, KKB, KKE, KWG, KKK and KKU plants (Degree of Protection 2).

Regarding the capacity of withstanding loads from **blast waves,** the assessment by the Reactor Safety Commission shows that the Degree of Protection 1 can be confirmed for all German NPPs, with the exception of the plants mentioned in the following, with regard to the assumed load (pressure according to the BMI Guideline).

As for the adherence to safety margins, there is also confirmatory information in some cases. In other cases, however, no clear statement can be derived from the information provided with respect to the adherence to safety margins. A corresponding review within the framework of this RSK safety review was not possible. The RSK therefore recommends that such reviews should be carried out additionally within the framework of the supervisory procedure.

In the case of the KWB-A, KKP 1, KKI 1 and GKN-1 plants, lower load were assumed, justified by site-specific conditions. Whether the Degree of Protection 1 is fulfilled depends on the presentation of additional proof and its confirmation.

The site-specific consideration of **toxic gases** is part of the design concept of German nuclear power plants. Having implemented measures to fulfil this requirement, all plants reach Degree of Protection 1. An automatic detection of such gases in terms of Degree of Protection 2 has not generally been installed; only in the Unterweser nuclear power plant is it planned to install an automatic detection system with resulting automatic ventilation isolation. The RSK considers a discussion of this topic necessary. It shall add this point to its working programme and deal with the resulting issues.

4.4.3 Terrorist attacks including attacks on computer-based controls and systems

Failure of the fundamental safety functions depending on the effort required for destruction

Considering the physical protection measures that are currently in place, the protection measures of the plants against external hazards (blast wave, aircraft crash) also represent at the same time a far-reaching status of protection against terrorist attacks by external intruders. In addition, a wide spectrum of possible destructions of essential system functions through terrorist attacks is covered by the consideration of the effects of postulates concerning the loss of the electricity and coolant supplies.

Within the time-frame set for this safety review, the RSK is not able to perform a robustness assessment of the plants regarding the necessary overcoming of staggered protection measures. Due to the high level of confidentiality regarding physical protection measures, the results of an assessment would only be available to a restricted group of persons.

Results of the RSK Safety Review

Considering the security measures that are currently in place, the protection measures of the plants against external hazards (blast wave, aircraft crash) also represent at the same time a far-reaching status of protection against terrorist attacks by external intruders. In addition, a wide spectrum of possible destructions of essential system functions through terrorist attacks is covered by the consideration of the effects of postulates concerning the loss of the electricity and coolant supplies.

Within the time-frame set for this safety review, the RSK was not able to perform a robustness assessment of the plants regarding the necessary overcoming of staggered protection measures.

Attacks on computer-based controls and systems

At present, no software-based systems are in use in the reactor protection systems of German nuclear power plants.

Software-based systems are partly used in limitation systems and operational systems. Despite the defence-in-depth concept it is therefore necessary to examine the effects of such attacks with regard to the robustness of these systems.

This is currently being done within the supervisory procedures of the *Länder* as a result of the Information Notice issued by GRS.

Results of the RSK Safety Review

At present, no software-based systems are in use in the reactor protection systems of German nuclear power plants.

Software-based systems are partly used in limitation systems and operational systems. Despite the defence-in-depth concept it is therefore necessary to examine the effects of such attacks with regard to the robustness of these systems.

This is currently being done within the supervisory procedures of the *Länder* as a result of the Information Notice issued by GRS.

4.4.4 Effects of an accident in one power plant unit on the neighbouring unit

Results of the RSK Safety Review

Regarding the **effects of an accident in one power plant unit on the neighbouring unit**, no specific questions were posed by the RSK. Hence there is no information that might be evaluated available on this topic area. Against the background of the experience gained from Fukushima, the RSK recommends that an analysis of this issue should be carried out as part of the supervisory procedure for the twin-unit plants concerned. Based on the postulated damage states of the neighbouring unit (i.a. fires, activity releases, core damage states, core meltdown), this analysis has to examine the consequences and assess the maintaining of the fundamental safety functions of the unaffected unit.

References

/4.1/ Kerntechnischer Ausschuss (KTA)
Auslegung von Kernkraftwerken gegen Blitzeinwirkungen, KTA-Regel 2206, Juni 2000

/4.2/ Bundesministerium des Inneren (BMI)
Richtlinie für den Schutz von Kernkraftwerken gegen Druckwellen aus chemischen Reaktionen durch Auslegung der Kernkraftwerke hinsichtlich ihrer Festigkeit und induzierter Schwingungen sowie durch Sicherheitsabstände, September 1976

/4.3/ Bundesministerium des Inneren (BMI)
Interpretation zu dem Sicherheitskriterium 2.6: "Einwirkungen von außen" - Grundsätze zur Bestimmung gefährlicher Stoffe im Sinne von Sicherheitskriterium 2.6 sowie zur Festlegung der notwendigen Schutzmaßnahmen gegen diese Stoffe, Interpretationen zu den Sicherheitskriterien für Kernkraftwerke, Mai 1979

/4.4/ RSK-Leitlinien für Druckwasserreaktoren
3. Ausgabe vom 14. Oktober 1981 (BAnz. 1982, Nr. 69a) mit den Änderungen: in Abschnitt 21.1 (BAnz. 1984, Nr. 104), in Abschnitt 21.2 (BAnz. 1983, Nr. 106) und in Abschnitt 7 (BAnz. 1996, Nr. 158a) mit Berichtigung (BAnz. 1996, Nr. 214) und den Anhängen vom 25. April 1979 zu Kapitel 4.2 der 2. Ausgabe der RSK-LL vom 24. Januar 1979 (BAnz. 1979, Nr. 167a)

/4.5/ Deutsches Institut für Normung e. V
DIN 1055-4:2005-03, Einwirkungen auf Tragwerke – Teil 4: Windlasten

/4.6/ Deutsches Institut für Normung e. V
DIN 25449:2008-02, Bauteile aus Stahl- und Spannbeton in kerntechnischen Anlagen - Sicherheitskonzept, Einwirkungen, Bemessung und Konstruktion

/4.7/ Deutsches Institut für Normung e. V
DIN 1055-5:2005-07, Einwirkungen auf Tragwerke - Teil 5: Schnee- und Eislasten

/4.8/ Kerntechnischer Ausschuss (KTA)
Nachwärmeabfuhrsysteme von Leichtwasserreaktoren, KTA-Regel 3301, November 1984

/4.9/ Deutsches Institut für Normung e. V
DIN 4701, Regel für die Berechnung des Wärmebedarfs von Gebäuden

/4.10/ Verband der Elektrotechnik, Elektronik und Informationstechnik
VDE 0185-305 (DIN EN 62305), Blitzschutz

5 Loss of electrical power and loss of ultimate heat sink

5.1 Loss of electrical power

The generic requirements for the electrical power supply in nuclear power plants (NPPs) in Germany are comprised in the German Nuclear Safety Standards KTA 3701 /5.1/. According to this safety standard, one source of supplying the safety-related trains is the unit generator of a NPP ('load rejection to house-load operation', automatic systems have to be available). Also two off-site (grid) connections have to exist for electrical power supply from which the electrical power for all trains of the emergency power system can be provided (main grid connection and standby grid connection). If possible, these two connections should be functionally separated from each other and decoupled with regard to their protective circuits, and they should also be linked either to separate off-site power grid switchyards or to different voltage levels. The connection of the standby grid connection in case of a challenge has to take place automatically. If the above mentioned supply options are not available, emergency power generating facilities with diesel generator and batteries have to be additionally provided on-site to ensure the electrical power supply of the emergency power loads. Furthermore, there has to be at least one further supply option providing the electrical power required for the supply of one residual heat removal train including all necessary instrumentation and control as well as auxiliary equipment (e.g. the emergency grid connection). It has to be possible to connect this emergency grid connection manually on demand. Battery capacities have to be designed to enable sufficient time for such manual measures. As an example a schematic diagram of the electrical power supply of a German PWR (construction line 4) is shown in Figure 5-1. For the other construction lines comparable solutions are required.

The requirements for the design of the emergency power facilities with diesel generator are specified in KTA 3702 /5.2/. Together with the requirements in KTA 3701 /5.1/, it follows that there has to be an n+2 redundant design (for example realized as 4x50% or 3x100%). Requirements for the storage of auxiliary and operating materials are also specified in KTA 3702.
Following a RSK recommendation /5.3/, the discharge time of the batteries in the emergency power system should be designed in such a way that the loads (of the uninterruptable AC and DC power supply) can be supplied by the batteries alone for at least 2 hours. This time was considered as sufficient for manual measures to establish other supply options. Further requirements to the battery design are described in the KTA 3703 /5.4/.
The requirements for the design of the emergency power facilities with DC/AC Converters are specified in KTA 3704 /5.5/.
As regards the protection of the plants against man-made external hazards, either specially protected additional emergency power diesel generators were installed or existing installations received additional protective cover.

The emergency power system design in German nuclear power plants has also been presented in the German report to the 5th Review Meeting on the Convention on Nuclear Safety in 2011 /5.6/.

The main characteristic features of the electrical power supply for the different construction lines are depicted in table 5-1 (PWR) and table 5-2 (BWR).

Figure 5-1: Schematic diagram of the electrical power supply of a German PWR (construction line 4)

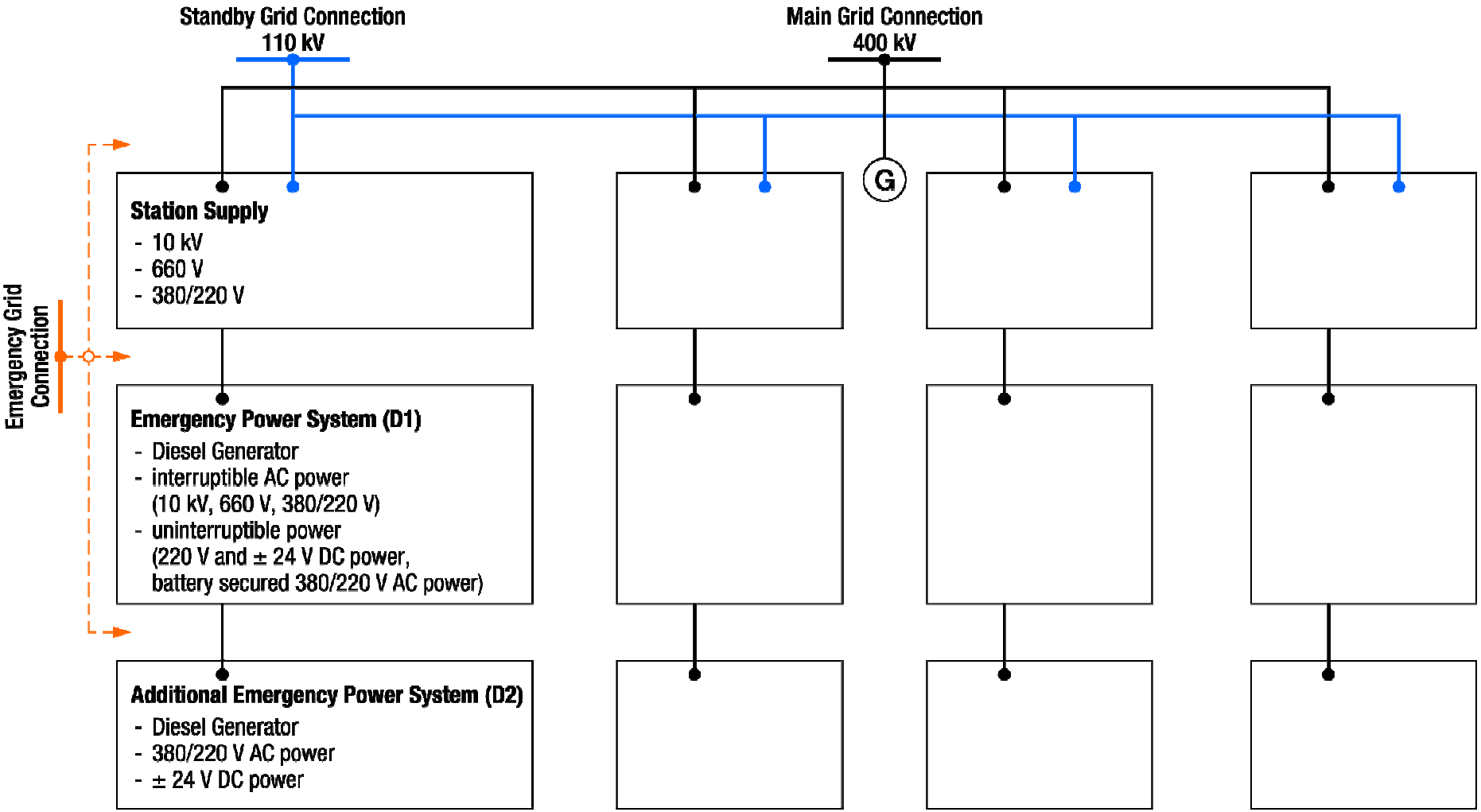

Table 5-1: Electric power supply, PWR

Design characteristics	Construction line 1	Construction line 2			Construction line 3	Construction line 4
	KWO[1]	KWB-A/B	GKN-I	KKU	KBR, KKG, KWG, KKP-2	KKE, KKI-2, GKN-II
Number of independent off-site power supplies	2	At least 3[6]				
Generator circuit breaker	Not applicable[1]	Yes				
Station supply in the case of loss of off-site power	Not applicable[1]	Yes, load rejection to house-load operation				
Emergency power supply	2 trains with 1 diesel each	4 trains with 1 diesel each	4 trains with 1 diesel each + 1 diesel (physically separated)	4 trains with 1 diesel each	4 trains with 1 diesel each (D1 emergency power system[4])	
Emergency power supply to cope with external events	Both trains are protected against external hazards	9 connections between both units + 2 trains with 1 additional diesel each (RZ[2])	2 of 4 trains are protected against external hazards	2 trains with 1 additional diesel each + 1 additional diesel	4 trains with 1 additional diesel each (D2 additional emergency feed power system[5])	
Uninterruptible DC power supply (battery-buffered)	2 trains with ±24 V each	2 trains with ±24 V each + 4 trains with 220 V each	4 trains with 220 V, ±24 V each	4 trains with 220 V, ±24 V each + 2 trains with ±24 V each	4 trains with 220 V, ±24 V each (D1-system) + 4 trains with ±24 V each (D2-system)	
Battery secured power supply	At least 2 hours[3]					

The information listed in the table is a brief compilation of the main aspects of the licensees' answers to the ENSREG questions. A comprehensive evaluation of the safety status of the NPPs is only possible on the basis of the complete information provided by the licensees.

[1] The KWO NPP is shutdown in 2005 and since 2008 in decommissioning. Therefore the design characteristics listed above are not applicable because the necessary system functions are adapted on the remaining functions (mainly the spent fuel pool cooling in the separate emergency building).

[2] RZ: Additional independent secondary feed water system

[3] The operating time of the DC power supply varies in the German plants. More information on this is listed in the answers to section 5.1.2 and 5.1.3.

[4] The D1 emergency power system is arranged in four trains, which are built physically separated and functionally independent. The buildings of the D1-system are protected against site-specific design basis earthquake and flooding. The D1-system is subdivided into an interruptible grid (an AC power supply (10 kV, 660 V, 380/220 V)) and an uninterruptible grid in each train. This uninterruptible grid contains a 220 V and a ±24 V DC power system and a battery secured AC power supply (380/220 V). The electrical supply of the D1-system is normally provided by the station supply system. In case of a challenge (loss of the electrical station supply) the four emergency diesel generators of the D1-system (approx. 5-6 MVA) have to take over automatically (activated by the reactor protection system) the electrical supply of the safety-related trains inside the D1-system and inside the subordinate D2-system. A manual activation of the D1-diesel generators is also possible.

[5] The D2 additional emergency feed power system is arranged in four trains, which are built physically separated and functionally independent. The buildings of the D2-system are protected against external hazards. The D2-system contains a 380/220 V AC power system and a ±24 V DC power system in each train. The electrical supply of the D2-system is normally provided by station supply system via the D1-system. In case of a challenge (simultaneous loss of the electrical station supply and the D1 power supply) the four D2- additional emergency diesel generators of the D2-system (approx. 1 MVA) have to take over automatically (activated by the reactor protection system) the electrical supply of the safety-related trains inside the D2-system. A manual activation of the D2-diesel generators is also possible.

[6] The number of independent off-site power supplies varies in the German PWRs. Below the different supply alternatives for each plant are listed:

KKE:

- main grid connection (400 kV, overhead line)
- standby grid connection (110 kV, underground cable, switch to station supply)
- emergency grid connection (110/30 kV, underground cable, switch to D1-system or D2-system)
- connection to ‘Hanekenfähr’ (10 kV, underground cable, switch to D1-system or D2-system)
- connection to ‘Stadtwerke Lingen’ (10 kV, underground cable, switch to D1-system or D2-system)
- connection to the emergency diesel generator of the intermediate storage facility
- connection to the pump storage hydropower plant ‘Koepchenwerk’
- connection to topping gas turbines in the adjacent gas power plant site (under construction, completion early 2012)

GKN-II:

- main grid connection (400 kV, overhead line)
- standby grid connection (110 kV, underground cable and alternatively overhead line, switch to station supply)
- emergency grid connection to gas-turbine Walheim (110 kV, underground cable and alternatively overhead line, switch to station supply)
- grid station (20 kV, switch to D2-system)

KKI-2:
- main grid connection (400 kV, overhead line)
- standby grid connection (110 kV, overhead line, switch to station supply)
- emergency grid connection (20 kV, underground cable, switch to D1- or D2-system)

KKP-2:
- main grid connection (400 kV, overhead line)
- standby grid connection (110 kV, overhead line, switch to station supply)
- emergency grid connection (20 kV, underground cable, switch to D2-system)

KWG:
- main grid connection (400 kV, overhead line)
- standby grid connection (110 kV, overhead line, switch to station supply)
- emergency grid connection (30 kV, underground cable, switch to D1-system)

KKG:
- main grid connection (400 kV, overhead line)
- standby grid connection (110 kV, overhead line, switch to station supply)
- emergency grid connection (20 kV, underground cable, switch to D1- and D2-system)

KBR:
- two main grid connection (400 kV, overhead line)
- two standby grid connection (220 kV, overhead line, switch to station supply)
- emergency grid connection (20 kV, underground cable, switch to station supply, switch to D1- or D2-system)

GKN-I:
- main grid connection (220 kV, overhead line)
- standby grid connection (110 kV, underground cable and alternatively overhead line, switch to station supply)
- emergency grid connection to gas-turbine Walheim (110 kV, underground cable and alternatively overhead line, switch to station supply)
- connection to GKN-II (110 kV, underground cable (connection to the GKN-II standby grid connection))
- grid station (20 kV)

KKU:
- main grid connection (400 kV, overhead line)
- standby grid connection (220 kV, overhead line, switch to station supply)
- emergency grid connection (20 kV, underground cable, switch to the emergency power system)

KWB-A:
- main grid connection (400 kV, overhead line)
- standby grid connection (220 kV, overhead line, switch to station supply (the same connection as in KWB-B))
- emergency grid connection (20 kV, underground cable, switch to station supply (the same connection as in KWB-B))
- 4 separated connections to KWB-B to the 10 kV station switchgears

- 5 separated connections to KWB-B to the 380 V emergency standby switchgears

KWB-B:
- main grid connection (400 kV, overhead line)
- main grid connection (220 kV, overhead line)
- standby grid connection (220 kV, overhead line, switch to station supply (the same connection as in KWB-A))
- emergency grid connection (20 kV, underground cable, switch to station supply (the same connection as in KWB-A))
- 4 separated connections to KWB-A to the 10 kV station switchgears
- 5 separated connections to KWB-A to the 380 V emergency standby switchgears

KWO:
- main grid connection (110 kV, overhead line)
- standby grid connection (20 kV, overhead line, switch to station supply)

Table 5-2: Electric power supply, BWR

Design characteristics	Construction line 69				Construction line 72
	KKB[2]	KKI-1	KKK	KKP-1	KRB II-B/C
Number of independent off-site power supplies	At least 3[6]				
Generator circuit breaker	Yes				
Station supply in the case of loss of off-site power	Yes, load rejection to house-load operation				
Emergency power supply	4 trains with 1 diesel each	4 trains with 1 diesel each	6 trains with 1 diesel each	2 trains with 2 diesels each	3 trains with 1 diesel each + 2 trains with 1 diesel each
Emergency power supply to cope with external events	2 trains with 1 additional diesel each (UNS[3])	2 of 4 trains are protected against external hazards	2 of 6 trains are protected against external hazards	2 trains with 1 additional diesel each (USUS[4])	2 of 3 trains are protected against external hazards +1 train with 1 additional diesel (AHRS[5]) + manual connections between both units
Uninterruptible DC power supply (battery-buffered)	2 trains with 220 V, 4 trains with±24 V each + 2 trains with 220 V, ±24 V each (UNS[3])	4 trains with 220 V, ±24 V each	6 trains with 220 V, ±24 V each	2 trains with 220 V, ±24 V each + 2 trains with 220 V, ±24 V each (USUS[4])	3 trains with 220 V, ±24 V each + 2 trains with 220 V, ±24 V each + 1 train with±24 V each(AHRS[5])
Battery secured power supply	At least 2 hours[1]				

The information listed in the table is a brief compilation of the main aspects of the licensees' answers to the ENSREG questions. A comprehensive evaluation of the safety status of the NPPs is only possible on the basis of the complete information provided by the licensees.

[1] The operating time of the DC power supply varies in the German plants. More information on this is listed in the answers to section 5.1.2 and 5.1.3.

[2] The basis for the answers of this questionnaire 'EU-Stresstest' is the described target state in the application for approval according to §7 Atomic Energy Law 'Improvement of the safety system'. The plant is not allowed to restart till the modification measures are implemented.

[3] UNS: Independent emergency system

[4] USUS: Independent sabotage and accident protection system

[5] AHRS: Additional residual heat removal and feed water system

[6] The number of independent off-site power supplies varies in the German BWRs. Below the different supply alternatives for each plant are listed:

KRB II-B/C:
- two main grid connection per unit (four in total, 400 kV, overhead line)
- standby grid connection (110 kV, overhead line (connection to both units), switch to emergency power system or to AHRS)
- emergency grid connection (20 kV, underground cable (connection to both units), switch to emergency power system or to AHRS)
- five separated connections between both units to the corresponding emergency power trains

KKP-1:
- main grid connection (400 kV, overhead line)
- standby grid connection (110 kV, two overhead lines, switch to station supply or to the emergency power system)
- emergency grid connection (20 kV, underground cable, switch to USUS)

KKI-1:
- main grid connection (400 kV, overhead line)
- standby grid connection (110 kV, overhead line, switch to station supply or to emergency power system)
- emergency grid connection to the hydro-electric power plant 'Niederaichbach' (6 kV, underground cable, switch to station supply or to emergency power system); additionally via the hydro-electric power plant a connection to the 20 kV grid is possible

KKK:
- two parallel main grid connections (400 kV, overhead line)
- two physically separated standby grid connection (110 kV, underground cable, switch to station supply)
- emergency grid connection to a pump storage hydro-power plant (10 kV, underground cable, switch to station supply or to emergency power system)
- standby power supply system of the intermediate storage

KKB:
- main grid connection (400 kV, overhead line)
- standby grid connection (30 kV, underground cable, switch to station supply)

- emergency grid connection to a gas turbine plant (380 kV, underground cable, switch to station supply or to UNS)

5.1.1 Loss of off-site power

In the case of a loss of off-site power all German NPPs have the ability of load rejection to house-load operation (With a successful load rejection the electrical supply of the safety-related trains is not temporally limited). If this load rejection fails an automatic switchover of the station supply to the standby grid connection happens. If this connection is also unavailable the emergency power system of the plants automatically takes over the electrical supply of the safety-related trains. The differences of the emergency power systems in the plants are described below.

PWR construction line 4 and construction line 3:

In the above explained case the safety-related trains of the construction line 4 (**KKE, GKN-II, KKI-2**) and the construction line 3 (**KKP-2, KWG, KKG, KBR**) NPPs will be electrically supplied by the D1 emergency power system (see explanation below table 5-1) which is protected against site-specific design basis earthquakes and flooding.
The fuel and oil capacity of the four emergency diesel generators are sufficient for at least 72 hours without manual measures (In KKP-2 the oil capacity has to be controlled regularly and if necessary has to be refilled). The cooling of these D1-diesel power engines is normally provided by the essential service water system (via a closed cooling water circuit). With manual measures (for example: switch-off of unnecessary loads, tank-to-tank fuel or oil transfer, intermittent operation of the D1-diesel generators or switch-off of unnecessary D1-diesel generators) the operating time can be increased.
With support of the D1-system the plant can be shutdown (to 'cold shutdown') and the residual heat can be removed. During loss of off-site power natural circulation transfers the residual heat of the reactor to the steam generators in the first phase of the shutdown. On the secondary side the residual heat is removed by atmospheric steam dump through the safety valves or the relief valves of the main steam lines. The evaporation losses of the secondary side will be made up by two start-up and shut-down pumps, which need in this case electrical supply by the D1-system, from the feed water tank, which can be refilled from the demineralized water inventory. In the later phase of the shutdown or if the heat removal via steam generators is not possible (e. g. open primary system) the residual heat will be removed by the residual heat removal system to the ultimate heat sink (e.g. river), which needs in this case electrical supply by the D1-system.
The residual heat removal from the spent fuel pool will be carried out by the spent fuel pool cooling system in this case electrically supplied by the D1-system.

PWR construction line 2:

GKN-I

The emergency power system is arranged in four trains, which are built physically separated and functionally independent inside the switchgear building and the emergency diesel building. Both buildings are protected against site-specific design basis earthquake and flooding. The emergency diesel building is arranged in four segments (each for one emergency power train with one emergency diesel generator). Two of the four segments are additionally protected against external hazards. The four emergency

diesel generators, the corresponding switchgears, the fuel storage tank and the remote shutdown station are placed in this building.
This system is subdivided into an interruptible grid (an AC power supply (6 kV, 660 V, 380/220 V)) and an uninterruptible grid (a DC power supply (220 V, ±24 V) and a battery secured AC power supply (380/220 V)).
The electrical supply of the emergency power system is normally provided by the station supply system. In case of a challenge (loss of the electrical station supply) the four emergency diesel generators have to take over automatically (activated by the reactor protection system) the electrical supply of the safety-related trains. A manual activation of these diesel generators is also possible.
The fuel and oil capacity of the four emergency diesel generators are sufficient for at least 72 hours without manual measures. The cooling of these diesel power engines is normally provided by well water. With manual measures (for example: switch-off of unnecessary loads, tank-to-tank fuel or oil transfer, intermittent operation of the emergency diesel generators or switch-off of unnecessary emergency diesel generators) the operating time can be increased.
The residual heat removal is similar as described for construction line 3 and 4 above. The evaporation losses of the secondary side will be made up by three start-up and shut-down pumps in this case electrically supplied by the emergency power system.
The residual heat removal from the spent fuel pool will be carried out by the spent fuel pool cooling system in this case electrically supplied by the emergency power system.

KKU

The emergency power system is arranged in four trains and in each train is one dedicated emergency diesel generator (approx. 3.9 MVA). The emergency power system is protected against site-specific design basis earthquake and flooding.
This system is subdivided into an interruptible grid (an AC power supply (10 kV, 525 V, 380/220 V)) and an uninterruptible grid (a DC power supply (220 V, ±24 V) and a battery secured AC power supply (380/220 V)).
The electrical supply of the emergency power system is normally provided by the station supply system. In case of a challenge (loss of the electrical station supply) the four emergency diesel generators have to take over automatically (activated by the reactor protection system) the electrical supply of the safety-related trains. A manual activation of these diesel generators is also possible.
The fuel and oil capacity of the four emergency diesel generators are sufficient for at least 72 hours without manual measures. The cooling of these diesel power engines is normally provided by the essential service water system (via a closed cooling water circuit). With manual measures (for example: switch-off of unnecessary loads, tank-to-tank fuel transfer from the boiler tank, intermittent operation of the emergency diesel generators or switch-off of unnecessary emergency diesel generators) the operating time can be increased to about one week or longer.
The residual heat removal is similar as described for construction line 3 and 4 above. The evaporation losses of the secondary side will be made up by the emergency feed water pumps in this case electrically supplied by the emergency power system.
The residual heat removal from the spent fuel pool will be carried out by the spent fuel pool cooling system (two independent trains) in this case electrically supplied by the emergency power system.

KWB-A/B

The emergency power system is arranged in four trains and in each train is one dedicated emergency diesel generator (approx. 3 MVA). The different trains of both units

can be connected among themselves.
This system is subdivided into an interruptible grid (an AC power supply (10 kV, 380/220 V)) and an uninterruptible grid (a DC power supply (220 V, ±24 V) and a battery secured AC power supply (380/220 V)).
The electrical supply of the emergency power system is normally provided by the station supply system. In case of a challenge (loss of the electrical station supply) the four emergency diesel generators have to take over automatically (activated by the reactor protection system) the electrical supply of the safety-related trains. A manual activation of these diesel generators is also possible.
The fuel and oil capacity and the cooling of the four emergency diesel generators are sufficient for at least 72 hours with manual measures. With further manual measures (for example: switch-off of unnecessary loads, tank-to-tank fuel and oil transfer, intermittent operation of the emergency diesel generators or switch-off of unnecessary emergency diesel generators) the operating time can be increased.
The residual heat removal is similar as described for construction line 3 and 4 above. The evaporation losses of the secondary side will be made up by the emergency feed water pumps (KWB-A is equipped with two steam-driven and two electrical emergency feed water pumps, KWB-B is equipped with four electrical emergency feed water pumps).
The residual heat removal from the spent fuel pool will be carried out by the spent fuel pool cooling system in this case electrically supplied by the emergency power system.

BWR construction line 72:

KRB II-B/C

The emergency power system is arranged in three trains, which are built physically separated and functionally independent. Two of these three trains are additionally protected against external hazards. In each train is one dedicated emergency diesel generator (approx. 4.8 MVA). All diesel generators are protected against flooding.
In addition two additional emergency diesel generators (approx. 4.8 MVA) are available, which are also protected against flooding.
Both systems are subdivided into an interruptible grid (an AC power supply (10 kV, 660 V, 380/220 V)) and an uninterruptible grid (a DC power supply (220 V, ±24 V) and a battery secured AC power supply (380/220 V)).
The electrical supply of the emergency power system is normally provided by the station supply system. In case of a challenge (loss of the electrical station supply) the three emergency diesel generators and the two additional emergency diesel generators have to take over automatically (activated by the reactor protection system) the electrical supply of the safety-related trains. A manual activation of these diesel generators is also possible.
The fuel and oil capacity of the five emergency diesel generators are sufficient for at least 72 hours without manual measures. The cooling of these diesel power engines is normally provided by the essential service water system (via a closed cooling water circuit). With manual measures (for example: switch-off of unnecessary loads, tank-to-tank fuel or oil transfer, intermittent operation of the emergency diesel generators or switch-off of unnecessary emergency diesel generators) the operating time can be increased.
With support of the emergency power system the plant can be shutdown (to ‘cold-shutdown’) and the residual heat can be removed. During loss of off-site power the steam will be released to the wetwell (pressure limitation due to safety relief valves and/or diverse motor-driven safety valves). The thermal energy stored in the wetwell is removed by the residual heat removal system, which needs in this case electrical supply by the emergency power system. Also the reactor pressure vessel feeding with

cooling water from the wetwell will be performed by this system.
The residual heat removal from the spent fuel pool will be carried out by the residual heat removal system in this case electrically supplied by the emergency power system.

BWR construction line 69:

KKP-1

The emergency power system is arranged in two trains, which are built physically separated and functionally independent inside the switchgear building and the emergency diesel building. Both buildings are protected against site-specific design basis earthquake. In each train are two dedicated emergency diesel generators (approx. 3.5 MVA).
This system is subdivided into an interruptible grid (an AC power supply (6 kV, 380/220 V)) and an uninterruptible grid (a DC power supply (220 V, ±24 V) and a battery secured AC power supply (380/220 V)).
The electrical supply of the emergency power system is normally provided by the station supply system. In case of a challenge (loss of the electrical station supply) the emergency power system has to take over automatically (activated by the reactor protection system) the electrical supply of the safety-related trains. The four emergency diesel generators will be started, but only two of them will be switched to their trains. The two other emergency diesel generators will be switched-off again. (If one of the operating diesel generators fails, one adequate back-up diesel generator automatically starts.) A manual activation of these diesel generators is also possible. Furthermore, the steam-driven high-pressure coolant injection system will be started. The control system of the steam driven pump is dependent on the unit batteries, which will be in this case charged from the emergency diesel generators.
The fuel capacity of the four emergency diesel generators is sufficient for at least 24 hours without manual measures. This time can be increased to about further 48 hours with manual measures like tank-to-tank fuel transfer from the existing fuel reservoir. The oil capacity of the four emergency diesel generators is sufficient for at least 72 hours without manual actions (The capacity has to be controlled regularly). The cooling of these diesel power engines is normally provided by the essential service water system (via a closed cooling water circuit). With further manual measures (for example: switch-off of unnecessary loads, tank-to-tank fuel or oil transfer, intermittent operation of the emergency diesel generators or switch-off of unnecessary emergency diesel generators) the operating time can be increased to about one week or longer.
With support of the emergency power system the plant can be shutdown (to ‘cold-shutdown’) and the residual heat can be removed. During loss of off-site power the steam will be released to the wetwell (pressure limitation due to safety relief valves and/or diverse motor-driven safety valves). The thermal energy stored in the wetwell is removed by the residual heat removal system, which needs in this case electrical supply by the emergency power system. The reactor pressure vessel feeding with cooling water from the wetwell will be performed by different measures in the high-pressure and in the low-pressure range (for example: by the steam-driven high-pressure coolant injection system or by the residual heat removal system).
The residual heat removal from the spent fuel pool will be carried out by the residual heat removal system in this case electrically supplied by the emergency power system.

KKI-1

The emergency power system is arranged in four trains and is protected against site-specific design basis earthquake and flooding. In addition the remote shutdown station

is protected against external hazards. In each train is one dedicated emergency diesel generator.
This system is subdivided into an interruptible grid (an AC power supply (6 kV, 380/220 V)) and an uninterruptible grid (a DC power supply (220 V, ±24 V) and a battery secured AC power supply (380/220 V)).
The electrical supply of the emergency power system is normally provided by the station supply system. In case of a challenge (loss of the electrical station supply) the four emergency diesel generators have to take over automatically (activated by the reactor protection system) the electrical supply of the safety-related trains. A manual activation of these diesel generators is also possible. Furthermore, the steam-driven high-pressure coolant injection system will be started. The control system of the steam driven pump is dependent on the unit batteries, which will be in this case charged from the emergency diesel generators.
The fuel capacity of the four emergency diesel generators is sufficient for at least 72 hours without manual measures. This time can be increased with manual measures like tank-to-tank fuel transfer from the existing fuel reservoir (boiler tank). The oil capacity of the four emergency diesel generators is sufficient for at least 72 hours without manual measures. The cooling of these diesel power engines is normally provided by the essential service water system (via a closed cooling water circuit). With further manual measures (for example: switch-off of unnecessary loads, tank-to-tank fuel or oil transfer, intermittent operation of the emergency diesel generators or switch-off of unnecessary emergency diesel generators) the operating time can be increased.
The shutdown (to 'cold shutdown') and residual heat removal of the plant is similar as described for KKP-1.
The residual heat removal from the spent fuel pool is similar as described for KKP-1.

KKK

The emergency power system is arranged in six trains. Four trains are built functionally independent inside the switchgear building and the emergency diesel building. The two other trains are physically separated inside the containment building (protected against external hazards) and in the special emergency diesel building. In each train is one dedicated emergency diesel generator. Two of these six diesel generators are bunkered and protected against site-specific design basis earthquake.
This system is subdivided into an interruptible grid (an AC power supply (10 kV, 660 V, 380/220 V)) and an uninterruptible grid (a DC power supply (220 V, ±24 V) and a battery secured AC power supply (380/220 V)).
The electrical supply of the emergency power system is normally provided by the station supply system. In case of a challenge (loss of the electrical station supply) the six emergency diesel generators have to take over automatically (activated by the reactor protection system) the electrical supply of the safety-related trains. A manual activation of these diesel generators is also possible. Furthermore, the steam-driven high-pressure coolant injection system will be started. The control system of the steam driven pump is dependent on the unit batteries, which will be in this case charged from the emergency diesel generators.
The fuel capacity of the six emergency diesel generators is sufficient for at least 72 hours; at three of these emergency diesel generators a switching between two fuel tanks will be performed manually. The time of 72 hours can be increased with manual measures like tank-to-tank fuel transfer from the existing fuel reservoir (boiler tank).
The oil capacity of the six emergency diesel generators is sufficient for at least 100 hours with consideration of manual measures (The capacity has to be controlled regularly). The cooling of these diesel power engines is normally provided by the essential service water system (via a closed cooling water circuit). With further manual measures (for example: switch-off of unnecessary loads, tank-to-tank fuel or oil trans-

fer, intermittent operation of the emergency diesel generators or switch-off of unnecessary emergency diesel generators) the operating time can be increased to about one week or longer.
The shutdown (to 'cold-shutdown') and residual heat removal of the plant is similar as described for KKP-1.
The residual heat removal from the spent fuel pool is similar as described for KKP-1.

KKB

The emergency power system is arranged in four trains, which are predominant built functionally independent inside the switchgear building. The building is protected against an explosion pressure. In each train is one dedicated emergency diesel generator (3 x approx. 3.2 MVA, 1 x approx. 2.8 MVA (physically separated from the other diesel generators outside of the switchgear building)).
This system is subdivided into an interruptible grid (an AC power supply (6 kV, 380/220 V)) and an uninterruptible grid (a DC power supply (220 V, ±24 V) and a secured battery AC power supply (380/220 V)).
The electrical supply of the emergency power system is normally provided by the station supply system. In case of a challenge (loss of the electrical station supply) the four emergency diesel generators have to take over automatically (activated by the reactor protection system) the electrical supply of the safety-related trains. A manual activation of these diesel generators is also possible. Furthermore, the steam-driven high-pressure coolant injection system will be started. The control system of the steam driven pump is dependent on the unit batteries, which will be in this case charged from the emergency diesel generators.
The fuel capacity of the four emergency diesel generators is sufficient for at least 48 hours without manual measures. The oil capacity of the four emergency diesel generators is sufficient for at least 34 hours without manual measures. The cooling of three diesel power engines is normally provided by the essential service water system (via a closed cooling water circuit). The fourth emergency diesel generator is air-cooled. With manual measures (for example: switch-off of unnecessary loads, tank-to-tank fuel or oil transfer, intermittent operation of the emergency diesel generators or switch-off of unnecessary emergency diesel generators) the operating time can be increased to about two weeks or longer.
The shutdown (to 'cold-shutdown') and residual heat removal of the plant is similar as described for KKP-1.
The residual heat removal from the spent fuel pool is similar as described for KKP-1.

PWR construction line 1:

KWO

In KWO only a spent fuel pool exists. This pool is arranged inside the separate emergency building and thus protected against external hazards.
The requirements for the residual heat removal are not very high, so that the grace period for manual measures is about 72 hours or longer. At first during loss of off-site power the residual heat removal occurs by evaporation.
There are two independent off-site power supplies available (the main grid connection and the standby grid connection). Furthermore, an emergency power system exists. The emergency power system is arranged in two trains, which are built physically separated and functionally independent inside the separate emergency building (protected against external hazards). In each train is one dedicated emergency diesel generator.
This system is subdivided into an interruptible grid (an AC power supply (380/220 V))

and an uninterruptible grid (a DC power supply (±24 V)).
The electrical supply of the emergency power system is normally provided by the off-site connections (via the station supply system). In case of a challenge (loss of the electrical station supply) the two emergency diesel generators have to take over automatically the supply of the safety-related trains (for example: essential service water system and spent fuel pool residual heat removal system). A manual activation of these diesel generators is also possible.
Due to an intermittent operation of the emergency diesel generators the fuel and oil capacity is sufficient for at least 72 hours without manual measures. With manual measures the operating time can be increased to about one week or longer.
The batteries (±24 V) supply a secured DC power for at least 10 hours (only for instrumentation and control systems).

5.1.2 Loss of off-site power and loss of the ordinary back-up AC power source

PWR construction line 4 and construction line 3:

For the construction line 4 (**KKE, GKN-II, KKI-2**) and for the construction line 3 (**KKP-2, KWG, KKG, KBR**) NPPs the D2 additional emergency feed power system (see explanation below table 5-1) is available if additional to the loss of off-site power the loss of the ordinary back-up AC power source (here: the D1-system) occurs. This system is protected against external hazards.
The fuel and oil capacity of the four D2 additional emergency diesel generators are sufficient for at least 24 hours without manual measures. With manual measures the operating time can be increased to at least further 48 hours (In the final report for the EU-stresstest of KWG this time is not specified, but heating oil reserves are available as fuel alternative and oil reserves are available inside the emergency feed water building). The cooling of these D2-diesel power engines is normally provided by the emergency feed water system. The emergency feed water systems of the different plants have sufficient water for at least 10 h to supply the steam generators and to cool the D2-diesel power engines (depending on the scenario this time can be longer). To increase this time manual actions are necessary to add further cooling water. Further manual measures to increase the operating time of the D2-diesel generators are for example the switch-off of unnecessary loads, tank-to-tank fuel or oil transfer from the D1-diesel generators, intermittent operation of the D2-diesel generators or switch-off of unnecessary D2-diesel generators.
With support of the D2-system the plant can be shutdown (to ‘cold-shutdown’) and the residual heat can be removed. During loss of off-site power natural circulation transfers the residual heat of the reactor to the steam generators in the first phase of the shutdown. On the secondary side the residual heat is removed by atmospheric steam dump through the safety valves or the relief valves of the main steam lines. The evaporation losses of the secondary side will be made up by the emergency feed water pumps with demineralized water from the emergency feed water reservoir. These pumps are directly coupled with the D2-diesel generators each. In the later phase of the shutdown or if the heat removal via steam generators is not possible (open primary system during shutdown) the residual heat will be removed by the emergency essential service water system (part of the residual heat removal system), which need in this case electrical supply by the D2-system.
The residual heat removal from the spent fuel pool will be carried out by the emergency essential service water system in this case electrically supplied by the D2-system.
The batteries of the D1-system (220 V, ±24 V) supply a secured DC power for at least

2 hours (plant specific times see list below). The batteries of the D2-system (±24 V) will be continuously charged from the D2-diesel generators.

KKE

The discharge time of the D1-batteries is at least 3 hours for the 220 V supply and at least 4 hours for the ±24 V supply. The discharge time of the D1-batteries in the different trains can be longer. With manual measures like switch-off of unnecessary loads these discharge times can be increased.

GKN-II

The discharge time of the D1-batteries is at least 6 hours for the 220 V supply and at least 3 hours for the ±24 V supply. The discharge time of the D1-batteries in the different trains can be longer. With manual measures like switch-off of unnecessary loads these discharge times can be increased.

KKI-2

The discharge time of the D1-batteries is at least 2 hours for the 220 V supply and at least 4 hours for the ±24 V supply. The discharge time of the D1-batteries in the different trains can be longer. With manual measures like switch-off of unnecessary loads these discharge times can be increased.

KKP-2

The discharge time of the D1-batteries is at least 3 hours for the 220 V supply and at least 2 hours for the ±24 V supply. The discharge time of the D1-batteries in the different trains can be longer. With manual measures like switch-off of unnecessary loads these discharge times can be increased.

KWG

The discharge time of the D1-batteries is at least 3 hours for the 220 V supply and at least 3 hours for the ±24 V supply. The discharge time of the D1-batteries in the different trains can be longer. With manual measures like switch-off of unnecessary loads these discharge times can be increased.

KKG

The discharge time of the D1-batteries is at least 2 hours for the 220 V supply and at least 4 hours for the ±24 V supply. The discharge time of the D1-batteries in the different trains can be longer. With manual measures like switch-off of unnecessary loads these discharge times can be increased.

KBR

The discharge time of the D1-batteries is at least 3 hours for the 220 V supply and at least 3 hours for the ±24 V supply. The discharge time of the D1-batteries in the differ-

ent trains can be longer. With manual measures like switch-off of unnecessary loads these discharge times can be increased.

PWR construction line 2:

GKN-I

For GKN-I one emergency condition diesel generator is available if additional to the loss of off-site power the loss of the ordinary back-up AC power source (here: the four emergency diesel generators) occurs. This emergency condition diesel generator is placed in the standby emergency diesel building. This building is physically separated from the emergency diesel building and it is protected against site-specific design basis earthquake and flooding. The emergency condition diesel generator can be manually switched to one of the four emergency power trains. The emergency feed water pump of the selected train will be switched-on automatically (activated by the reactor protection system). This pump can supply all three steam generators.
The fuel and oil capacity of the standby emergency diesel generator are sufficient for at least 38 hours without manual measures. This emergency condition diesel generator is air-cooled. With manual measures (for example: switch-off of unnecessary loads, tank-to-tank fuel or oil transfer from the other emergency diesel generators) the operating time can be increased.
The residual heat removal is similar as described for construction line 3 and 4 above. The evaporation losses of the secondary side will be made up by the emergency feed water pump in this case electrically supplied by the emergency condition diesel generator.
The residual heat removal from the spent fuel pool will be carried out by the residual heat removal system in this case electrically supplied by the emergency condition diesel generator.
The batteries of the emergency power system (220 V, ±24 V) supply a secured DC power. The discharge time of these batteries is at least 10 hours for the 220 V supply and at least 2 hours for the ±24 V supply. The discharge time of the different batteries in the different trains can be longer. With manual measures like switch-off of unnecessary loads these discharge times can be increased to about 10 hours. The batteries of the selected emergency power train (220 V, ±24 V) will be continuously charged from the emergency condition diesel generator.

KKU

For KKU the emergency condition power system is available if additional to the loss of off-site power the loss of the ordinary back-up AC power source (here: the emergency power system) occurs. This system is arranged in two trains (each of these two trains is dedicated to two trains of the station supply system) and in each train is one dedicated emergency condition diesel generator (approx. 0.9 MVA / 1.4 MVA). The emergency condition power system is protected against external hazards and it contains a 380/220 V AC power supply and a ±24 V DC power supply in each train.
The electrical supply of this system is normally provided by the station supply system. In case of a challenge (loss of the electrical station supply) the two emergency condition diesel generators (emergency condition power system) have to take over automatically (activated by the reactor protection system) the electrical supply of the safety-related trains. A manual activation of these diesel generators is also possible.
The fuel and oil capacity of the two emergency condition diesel generators are sufficient for at least 24 hours without manual measures. With manual measures (for example: tank-to-tank fuel transfer from the storage tank) the operating time can be in-

creased. The cooling of these diesel power engines is normally provided from the emergency feed water tanks (installed in each train of the emergency condition power system). Further manual measures to increase the operating time are for example the switch-off of unnecessary loads or tank-to-tank fuel or oil transfer from the other emergency diesel generators, intermittent operation of the emergency condition diesel generators or switch-off of unnecessary emergency condition diesel generators.
The residual heat removal is similar as described for construction line 3 and 4 above. The evaporation losses of the secondary side will be made up by the emergency condition feed water pumps (2 x 100 %). These pumps are directly coupled with each additional emergency diesel generator.
The residual heat removal from the spent fuel pool will be carried out by the emergency essential service water system in this case electrically supplied by the emergency condition power system.
The batteries of the emergency power system 1 (220 V, ±24 V) supply a secured DC power. The discharge time of these batteries is at least 3 hours for the 220 V supply and at least 2 hours for the ±24 V suppl. The discharge time of the different batteries in the different trains can be longer. With manual measures like switch-off of unnecessary loads these discharge times can be increased. The batteries of the emergency condition power system (±24 V) will be continuously charged from the emergency condition diesel generators.

KWB-A/B

For KWB-A/B the connections to the 380 V emergency standby switchgears of the other unit are available if additional to the loss of off-site power the loss of the ordinary back-up AC power source (here: the emergency power system) occurs. In case of a challenge (loss of off-site power) these connections have to take over automatically the electrical supply of the safety-related trains. These 380 V-connections can be replaced due to the connections to the 10 kV station supply of the other unit.
The steam generator feeding is performed by the emergency standby system of the other unit or with the additional independent secondary feed water system, which starts automatically at low steam generator water level (The active components of this system are arranged in two trains, which are protected against external hazards. In each train is one dedicated additional emergency diesel generator. This system can be used from both units.)
The residual heat removal from the spent fuel pool will be carried out by the emergency essential service water system in this case electrically supplied by the emergency power system of the other unit (KWB-A is equipped with two steam-driven and two electrical emergency feed water pumps, KWB-B is equipped with four electrical emergency feed water pumps).
The unit batteries (220 V, ±24 V) supply a secured DC power. The discharge time of these batteries is at least 5 hours (KWB-A) and at least 7 hours (KWB-B) for the 220 V supply and at least 6 hours (KWB-A) and at least 7 hours (KWB-B) for the ±24 V supply. The discharge time of the different batteries in the different trains can be longer. With manual measures like switch-off of unnecessary loads these discharge times can be increased.

BWR construction line 72:

KRB II-B/C

For KRB II-B/C one AHRS (the additional residual heat removal and feed water system) emergency diesel generator is available if additional to the loss of off-site power

the loss of the ordinary back-up AC power source (here: the three emergency diesel generators and the two additional emergency diesel generators) occurs. Each unit has its own dedicated and fully independent AHRS system. Inside each system one diverse emergency diesel generator (approx. 3.5 MVA) is available. This emergency diesel generator is protected against site-specific design basis earthquake and flooding and is physically separated from the other emergency diesel generators with respect to an airplane crash. AHRS is subdivided into an interruptible grid (an AC power supply (10 kV, 660 V, 380/220 V)) and an uninterruptible grid (a DC power supply (±24 V).
Furthermore, five direct connections to the corresponding emergency power train of the other unit exist.
The electrical supply of AHRS is normally provided by the station supply system. In case of a challenge (loss of the electrical station supply) the AHRS-diesel generator has to take over automatically (activated by the reactor protection system) the electrical supply of the safety-related trains.
The fuel and oil capacity of the AHRS emergency diesel generator are sufficient for at least 72 hours without manual measures. The cooling of this AHRS-diesel power engine is normally provided by the AHRS service water system (via a wet cell-type cooling tower). With manual measures (for example: switch-off of unnecessary loads or tank-to-tank fuel or oil transfer from the other emergency diesel generators) the operating time can be increased.
With support of AHRS the plant can be shutdown (to ‘cold-shutdown’) and the residual heat can be removed. During loss of off-site power the steam will be released to the wetwell (pressure limitation by safety relief valves and/or diverse motor-driven safety valves). The thermal energy stored in the wetwell is removed by the AHRS residual heat removal system. Also the reactor pressure vessel feeding with cooling water from the wetwell will be performed by this system. Furthermore, this system actuates the high-pressure and low-pressure coolant injection pumps and also the depressurisation equipment (to reduce the pressure in the reactor vessel, after opening of the diverse motor-driven valves (on demand of AHRS, by battery-supply) the permanent pressure relief is secured).
The residual heat removal from the spent fuel pool occurs by evaporation. The evaporation losses can be made up by mobile pump(s).
The batteries of the emergency power system (220 V, ±24 V) supply a secured DC power. The discharge time of these batteries is at least 2 hours. The discharge time of the different batteries in the different trains can be longer. With manual measures like for example switch-off of unnecessary loads these discharge times can be increased to about 8 hours. The batteries of AHRS (±24 V) will be continuously charged from the AHRS-diesel generator.

BWR construction line 69:

KKP-1

For KKP-1 two USUS (the independent sabotage and accident protection system) emergency diesel generators are available if additional to the loss of off-site power the loss of the ordinary back-up AC power source (here: the emergency power system) occurs. USUS is arranged in two trains, which are built physically separated and functionally independent inside the USUS building. This building is protected against external hazards. In each train is one dedicated additional emergency diesel generator (approx. 3.5 MVA). USUS is subdivided into an interruptible grid (an AC power supply (6 kV, 380/220 V)) and an uninterruptible grid (a DC power supply (220 V, ±24 V)).
The electrical supply of USUS is normally provided by the station supply system via the emergency power system. In case of a challenge (loss of the electrical station supply) the two USUS-diesel generators have to take over automatically (activated by the reac-

tor protection system) the electrical supply of the safety-related trains. Furthermore, the steam-driven high-pressure coolant injection system will be started. The control system of the steam driven pump is dependent on the unit batteries.
The fuel and oil capacity of the two USUS emergency diesel generators are sufficient for at least 72 hours without manual measures (The capacity has to be controlled regularly).The cooling of these USUS-diesel power engines is normally provided by well water (the cooling by river is also possible). With manual measures (for example: tank-to-tank fuel transfer from the existing fuel reservoir, switch-off of unnecessary loads, tank-to-tank fuel or oil transfer from the other emergency diesel generators, intermittent operation of the USUS-diesel generators or switch-off of unnecessary USUS-diesel generators) the operating time can be increased to about one week or longer.
With support of USUS the plant can be shutdown (to 'cold-shutdown') and the residual heat can be removed. During loss of off-site power the steam will be released to the wetwell (pressure limitation due to safety relief valves and/or diverse motor-driven safety valves). The thermal energy stored in the wetwell is removed by the residual heat removal system, which need in this case electrical supply by USUS. The reactor pressure vessel feeding with cooling water from the wetwell will be performed by different measures in the high-pressure and in the low-pressure range (for example: by the steam-driven high-pressure coolant injection system or by the residual heat removal system). To reach the low-pressure range, the pressure in the reactor vessel has to be reduced using two main depressurisation valves. Diverse motor-driven valves (battery-supplied) are available additionally which can also be used for pressure relief if necessary.
The residual heat removal from the spent fuel pool occurs by evaporation. The evaporation losses can be made up by fire pump(s) or mobile pump(s). Therefore special hose connections are provided. Additionally, in the frame of emergency measures, the circulation pump of the operational heat removal systems from spent fuel pool can be supplied from USUS. The related cooler can be cooled by fire fighting water.
The batteries of the emergency power system (220 V, ±24 V) supply a secured DC power. The discharge time of these batteries is at least 3 hours. The discharge time of the different batteries in the different trains can be longer. With manual measures like for example switch-off of unnecessary loads these discharge times can be increased. The batteries of USUS (220 V, ±24 V) will be continuously supplied from the USUS-diesel generators.

KKI-1

For KKI-1 the emergency grid connection to the hydro-electric power plant 'Niederaichbach', which has a black starting capability, is available if additional to the loss of off-site power the loss of the ordinary back-up AC power source (here: the emergency power system) occurs. Additionally via the emergency grid connection and the hydro-electric power plant a connection to the 20 kV grid is given. Furthermore, the steam-driven high-pressure coolant injection system will be started. The control system of the steam driven pump is dependent on the unit batteries, which can be recharged using an accident management measure and a mobile diesel generator stored on-site.
The capacity of the emergency grid connection is sufficient to shutdown the plant (to 'cold-shutdown) and to remove the residual heat. During loss of off-site power the steam will be released to the wetwell (pressure limitation due to safety relief valves and/or diverse motor-driven safety valves). The thermal energy stored in the wetwell is removed by the residual heat removal system, which needs in this case electrical supply by the emergency grid connection. The reactor pressure vessel feeding with cooling water from the wetwell will be performed by different measures in the high-pressure and in the low-pressure range (for example: by the steam-driven high-pressure coolant injection system or by the residual heat removal system). To reach the low-pressure

range, the pressure in the reactor vessel has to be reduced using an (automatic) depressurisation (after opening of the diverse motor-driven valves (battery-supplied) the permanent pressure relief is secured).
The residual heat removal from the spent fuel pool will be carried out by the residual heat removal system in this case electrically supplied by the emergency grid connection.
The batteries of the emergency power system (220 V, ±24 V) supply a secured DC power. The discharge time of these batteries is at least 2 hours for the 220 V supply and at least 3 hours for the ±24 V supply. The discharge time of the different batteries in the different trains can be longer. With manual measures like for example switch-off of unnecessary loads these discharge times can be increased.

KKK

For KKK the emergency grid connection to a pump storage hydropower station, which has a black starting capability, is available if additional to the loss of off-site power the loss of the ordinary back-up AC power source (here: the emergency power system) occurs. Furthermore, the steam-driven high-pressure coolant injection system will be started. The control system of the steam driven pump is dependent on the unit batteries.
The capacity of the emergency grid connection is sufficient to shutdown the plant (to 'cold-shutdown') and to remove the residual heat. During loss of off-site power the steam will be released to the wetwell (pressure limitation due to safety relief valves and/or diverse motor-driven safety valves). During the shutdown phase the reactor pressure vessel will be fed by the steam-driven high-pressure coolant injection system (with cooling water from the wetwell). If the wetwell achieves the boiling point or the unit batteries fail the feeding of the reactor pressure vessel has to be continued with cooling water from the feed water tank due to the developed pressure difference between tank and vessel (Feeding with a mobile pump is also possible). To reduce the pressure in the reactor vessel an (automatic) depressurisation has to be performed (after opening of the diverse motor-driven valves (battery-supplied) the permanent pressure relief is secured).
The residual heat removal from the spent fuel pool will be carried out by the residual heat removal system in this case electrically supplied by the emergency grid connection.
The batteries of the emergency power system (220 V, ±24 V) supply a secured DC power. The discharge time of these batteries is at least 4 hours for the 220 V supply and at least 6 hours for the ±24 V supply. The discharge time of the different batteries in the different trains can be longer. With manual measures like for example switch-off of unnecessary loads these discharge times can be increased.

KKB

For KKB two UNS (the independent emergency system) emergency diesel generators are available if additional to the loss of off-site power the loss of the ordinary back-up AC power source (here: the emergency power system) occurs. UNS is arranged in two trains, which are built physically separated and functionally independent inside the UNS building. This building is protected against site-specific design basis earthquake flooding, and an explosion pressure wave. In each train is one dedicated additional emergency diesel generator (approx. 1.2 MVA). UNS is subdivided into an interruptible grid (an AC power supply (380/220 V)) and an uninterruptible grid (a DC power supply (220 V, ±24 V) and a battery secured AC power supply (380/220 V)).
The electrical supply of UNS is normally provided by the station supply system. In case

of a challenge (loss of the electrical station supply) the two UNS-diesel generators have to take over automatically (activated by the reactor protection system) the electrical supply of the safety-related trains. Furthermore, the steam-driven high-pressure coolant injection system will be started. The control system of the steam driven pump is dependent on the unit batteries.
The fuel capacity of the two UNS emergency diesel generators is sufficient for at least 86 hours without manual measures. The oil capacity of the two UNS emergency diesel generators is sufficient for at least 60 hours without manual measures. The cooling of these UNS-diesel power engines is normally provided by the UNS cooling water system (evaporation losses have to be added). With manual measures (for example: switch-off of unnecessary loads, tank-to-tank fuel or oil transfer from the other emergency diesel generators, intermittent operation of the UNS-diesel generators or switch-off of unnecessary UNS-diesel generators) the operating time can be increased to about two weeks or longer.
With support of UNS the plant can be shutdown (to 'cold-shutdown') and the residual heat can be removed. During loss of off-site power the steam will be released to the wetwell (pressure limitation by safety relief valves and/or diverse UNS-motor-driven safety valves). During the shutdown phase the reactor pressure vessel will be fed by the steam-driven high-pressure coolant injection system (the unit batteries have to be available) (with cooling water from the wetwell). If the wetwell achieves a high temperature or the unit batteries fail the automatic depressurisation reduces the pressure in the reactor vessel (activated by UNS) and the UNS low-pressure coolant injection system takes over the feeding of the reactor vessel.
The residual heat removal from the spent fuel pool will be carried out by UNS.
The batteries of the emergency power system (220 V, ±24 V) supply a secured DC power. The discharge time of these batteries is at least 3 hours. The discharge time of the different batteries in the different trains can be longer. With manual measures like for example switch-off of unnecessary loads these discharge times can be increased. The batteries of UNS (220 V, ±24 V) will be continuously supplied due to the UNS-diesel generators.

PWR construction line 1:

KWO

See answer to section 5.1.1.

5.1.3 Loss of off-site power and loss of the ordinary back-up AC power sources, and loss of permanently installed diverse back-up AC power sources

In the case of a loss of off-site power, a loss of the ordinary back-up AC power sources and a loss of permanently installed diverse back-up AC power sources the subcriticality will be secured due to the reactor scram, which is automatically activated in case of loss of station supply (In PWR a subcritical hot-standby state will be reached. After the return of AC power the reactor will be cooled down Injection of boron will be necessary to reach cold shutdown state.).
In all German NPPs is at least an emergency grid connection available, which enables in this scenario the electrical supply of the safety-related trains. Manual measures of the shift staff are necessary. Furthermore almost all of the German plants have access to further off-site power supply options/connections (see the lists below table 5-1 and table 5-2). One of these options is the connection of a mobile or an additional diesel

generator to the electrical grid of the plant. These generators are in some plants already available on-site (exception: KKE, KBR (mobile diesel located off-site), KWO, KRB II-B/C, KKK, KKB).

PWR construction line 4, construction line 3 and construction line 2:

If no AC power supply is available (excluded the uninterruptible AC power) the approach for the residual heat removal is in the German PWR plants (**KKE, GKN-II, KKI-2, KKP-2, KWG, KKG, KBR, GKN-I, KKU, KWB-A/B**) very similar (exception: **KWO** because in decommissioning phase). In this case all operational and safety-relevant systems for steam generator feeding are unavailable and thus the accident management measure 'secondary bleed and feed' will be applied. (This measure has the objective to depressurise the steam generators and to feed into the depressurised steam generators to ensure core cooling.) In general, it is proved that for the accident management measures corresponding to the accident management manual the present plant personnel can perform independently these measures and that the available time is sufficient. The corresponding times for the different feeding options described in the following differ from plant to plant due to different features of the plant design (e. g. water inventory on secondary side of the steam generators, water inventory of the feed water system with or without feed water tank) and different assumption for the calculation of these times. Therefore, in the following time frames for the different feeding options are given.
The preparation time for the accident management measure 'secondary bleed and feed' amounts to 50 to 70 minutes. During loss of off-site power natural circulation transfers the residual heat of the reactor to the steam generators. On the secondary side the residual heat is removed by atmospheric steam dump through the safety valves or the relief valves of the main steam lines. The evaporation losses of the secondary side will be made up primarily by the feed water inventory (from the feed water lines and from the feed water tank, if available) if the pressure in the steam generator drops below the pressure of the feed water lines or of the feed water tank. Then steam generator feeding occurs in a passive manner. A time-span of 2 to 7.5 hours can be gained by this measure. For long-term heat removal feeding of at least one steam generator with a mobile pump is necessary. This pump is combustion engine driven and can take the water from different water storages (e. g. demineralized water tanks) or from the well/river. The time period gained by this active feeding measure is between 16 and 30 hours (until depletion of emergency feed water reservoir). However, further feeding with mobile pump(s) is not temporally limited if an adequate water supply is assured. The above mentioned measure 'secondary bleed and feed' is also possible in case of complete loss of DC power supply (batteries) (passive arrangements, e. g.: the pilot valves for the safety valves function by closed-circuit principle, i. e. they open in case of loss of DC power supply; manual measures, e. g. manual opening of valves inside the emergency feed water system).
Is the measure 'secondary bleed and feed' not successful, the accident management measure 'primary bleed and feed' is a further option to refill the reactor cooling system with coolant inventory of the emergency core cooling systems. For this measure the primary system pressure has to be decreased by opening the pressuriser relief and safety valves to such an extent that the emergency core cooling systems (e. g. accumulators) are able to refill the reactor cooling system in a passive manner. By this measure the grace period to restore power supply is between 90 and 100 minutes. The preparation for this measure occurs during the 'secondary bleed and feed'-phase. For the above mentioned measure 'primary bleed and feed' or for their preparation the battery secured power supply is necessary. The discharge time of the batteries in the different plants is listed below.
If the reactor pressure vessel is not closed the residual heat will be removed by evapo-

ration. The evaporation losses can be made up by the accumulators. The grace period without any accident management measure for such an open reactor pressure vessel (by mid-loop operation) is between 1 and 3 hours until the water level drops to the top of fuel elements.
The residual heat removal from the spent fuel pool occurs by evaporation. The evaporation losses can be made up by mobile pump(s) (Maintaining recriticality may requires in addition the injection of boron water.). The grace period without any accident management measure for the spent fuel pool (immediately after core unloading) is between 15 and 18 hours until a temperature of 80 °C is reached and between 55 and 100 hours until the water level has dropped to the top of the fuel elements.

KKE

The mobile pump is located inside the emergency feed water building and thus protected against external hazards.
The discharge time of the D1-batteries (220 V, ±24 V) is listed above in the answer to section 5.1.2 and the discharge time of the D2-batteries (±24 V) is at least 5 hours. The discharge time of the D2-batteries in the different trains in the plant can be longer. With manual measures like for example switch-off of unnecessary loads these discharge times can be increased.

GKN-II

The mobile pump is located inside the emergency feed water building and thus protected against external hazards.
The discharge time of the D1-batteries (220 V, ±24 V) is listed above in the answer to section 5.1.2 and the discharge time of the D2-batteries (±24 V) is at least 11 hours. The discharge time of the D2-batteries in the different trains in the plant can be longer. With manual measures like for example switch-off of unnecessary loads these discharge times can be increased.

KKI-2

Mobile pumps are located at different places on-site.
The discharge time of the D1-batteries (220 V, ±24 V) is listed above in the answer to section 5.1.2 and the discharge time of the D2-batteries (±24 V) is at least 5 hours. The discharge time of the D2-batteries in the different trains in the plant can be longer. With manual measures like for example switch-off of unnecessary loads these discharge times can be increased.

KKP-2

It is planned, that the mobile pump will be located inside the emergency feed water building and thus protected against external hazards.
The discharge time of the D1-batteries (220 V, ±24 V) is listed above in the answer to section 5.1.2 and the discharge time of the D2-batteries (±24 V) is at least 2 hours. The discharge time of the D2-batteries in the different trains in the plant can be longer. With manual measures like for example switch-off of unnecessary loads these discharge times can be increased.

KWG

The mobile pump is located on-site.
The discharge time of the D1-batteries (220 V, ±24 V) is listed above in the answer to section 5.1.2 and the discharge time of the D2-batteries (±24 V) is at least 2 hours. The discharge time of the D2-batteries in the different trains in the plant can be longer. With manual measures like for example switch-off of unnecessary loads these discharge times can be increased.

KKG

Mobile pumps are located at different places on-site.
The discharge time of the D1-batteries (220 V, ±24 V) is listed above in the answer to section 5.1.2 and the discharge time of the D2-batteries (±24 V) is at least 4 hours. The discharge time of the D2-batteries in the different trains in the plant can be longer. With manual measures like for example switch-off of unnecessary loads these discharge times can be increased.

KBR

Mobile pumps are located at different places on-site, one in a dedicated container close to the emergency feed water building.
The discharge time of the D1-batteries (220 V, ±24 V) is listed above in the answer to section 5.1.2 and the discharge time of the D2-batteries (±24 V) is at least 3 hours. The discharge time of the D2-batteries in the different trains in the plant can be longer. With manual measures like for example switch-off of unnecessary loads these discharge times can be increased.

GKN-I

The mobile pump is located inside the emergency feed water building and thus protected against external hazards.
The discharge time of the batteries of the emergency power system (220 V, ±24 V) is listed above in the answer to section 5.1.2.

KKU

Mobile fire fighting pumps are located on-site.
The discharge time of the batteries of the emergency power system 1 (220 V, ±24 V) is listed above in the answer to section 5.1.2 and the discharge time of the batteries of the emergency condition power system (±24 V) is at least 3 hours. The discharge time of the different batteries in the different trains can be longer. With manual measures like for example switch-off of unnecessary loads these discharge times can be increased.

KWB-A/B

At first the steam generator feeding occurs automatically at low steam generator water level by measures of the ‘additional independent secondary feed water system’. This system has separated batteries, which also supply DC power if the unit battery supply fails. The discharge time of these separated batteries is more than 30 hours. The residual heat will be removed by atmospheric steam dump.
If this additional independent secondary feed water system also fails the accident man-

agement measure ‘secondary bleed and feed’ can be realized without any power supply only with manual measures (manual opening of valves).
Mobile pumps are located at different places on-site.

BWR construction line 72:

KRB II-B/C

If no AC power supply is available (excluded the uninterruptible AC power) and the connection to the emergency grid also fails, the steam will be released to the wetwell (pressure limitation with relief valves and/or diverse motor-driven safety valves, manually or automatically, after opening of the diverse motor-driven valves (on demand of AHRS, by battery-supply) the permanent pressure relief is secured), so that the feeding of the reactor pressure vessel will continue with cooling water from the feed water tank due to the developed pressure difference between tank and vessel. In addition mobile pumps are available to feed the reactor vessel (in the low pressure range).
For containment heat removal and to avoid containment over-pressurization failure the filtered containment venting is possible (no battery supply is needed).
The residual heat from the spent fuel pool can be removed by evaporation. The evaporation losses can be made up by mobile pump(s).
Mobile pumps are located at different places on-site.
The discharge time of the batteries of the emergency power system (220 V, ±24 V) is listed above in the answer to section 5.1.2 and the discharge time of the AHRS-batteries (±24 V) is at least 8 hours. The discharge time of the different AHRS-batteries in the different trains can be longer. With manual measures like for example switch-off of unnecessary loads these discharge times can be increased.

BWR construction line 69:

KKP-1

If no AC power supply is available (excluded the uninterruptible AC power) and the connection to the emergency grid also fails, the steam will be released to the wetwell (pressure limitation due to safety relief valves and/or diverse motor-driven safety valves) and the feeding of the reactor pressure vessel will be carried out by the steam-driven high-pressure coolant injection system (with cooling water from the wetwell). The control system of the steam driven pump is dependent on the unit batteries. If the wetwell achieves the boiling point or the unit batteries fail the feeding of the reactor pressure vessel has to be continued with a mobile pump from the demineralized water inventory. To reach the low-pressure range, the pressure in the reactor vessel has to be reduced using two main depressurisation valves. Diverse motor-driven valves (battery-supplied) are available additionally which can also be used for pressure relief if necessary.
For containment heat removal and to avoid containment over-pressurization failure the filtered containment venting is possible (without power supply).
The residual heat from the spent fuel pool can be removed by evaporation. The evaporation losses can be made up by fire pump(s) or mobile pump(s). Special hose connections are provided.
The discharge time of the batteries of the emergency power system (220 V, ±24 V) is listed above in the answer to section 5.1.2 and the discharge time of the USUS-batteries (220 V, ±24 V) is at least 3 hours. The discharge time of the different USUS-batteries in the different trains can be longer. With manual measures like for example

switch-off of unnecessary loads these discharge times can be increased to about 10 hours.

KKI-1

If no AC power supply is available (excluded the uninterruptible AC power) and the connection to the emergency grid also fails, the steam will be released to the wetwell (pressure limitation with safety relief valves and/or the diverse motor-driven safety valves) and the feeding of the reactor pressure vessel will be carried out by the steam-driven high-pressure coolant injection system (with cooling water from the wetwell). The control system of the steam driven pump is dependent on the unit batteries. In case of a failure of this feeding possibility, the feeding of the reactor pressure vessel has to be continued using accident management measures, i. e. with cooling water from the feed water tank due to the developed pressure difference between tank and vessel or feeding with a mobile pump. Before this, the pressure in the reactor vessel has to be reduced using an (automatic) depressurisation (after opening of the diverse motor-driven valves (battery-supplied) the permanent pressure relief is secured).
For containment heat removal and to avoid containment over-pressurization failure the filtered containment venting is possible (with battery supply, but containment venting without battery-supply by manual actions is also possible).
The residual heat from the spent fuel pool can be removed by evaporation. The evaporation losses can be made up by mobile pump(s).
The discharge time of the batteries of the emergency power system (220 V, ±24 V) is listed above in the answer to section 5.1.2.

KKK

If no AC power supply is available (excluded the uninterruptible AC power) and the connection to the emergency grid also fails, the steam will be released to the wetwell (pressure limitation with safety relief valves and/or the diverse motor-driven safety valves) and the feeding of the reactor pressure vessel will be carried out by the steam-driven high-pressure coolant injection system (with cooling water from the wetwell). The control system of the steam driven pump is dependent on the unit batteries (It is planned to recharge these batteries with the standby power supply system of the intermediate storage.). If the wetwell achieves the boiling point or the unit batteries fail the feeding of the reactor pressure vessel has to be continued with cooling water from the feed water tank due to the developed pressure difference between tank and vessel. To reduce the pressure in the reactor vessel an (automatic) depressurisation has to be performed (after opening of the diverse motor-driven valves (battery-supplied) the permanent pressure relief is secured). In addition mobile pumps are available to feed the reactor vessel (in the low pressure range).
For containment heat removal and to avoid containment over-pressurization failure the filtered containment venting is possible (battery supply is necessary).
The residual heat from the spent fuel pool can be removed by evaporation. The evaporation losses can be made up by mobile pump(s).
The discharge time of the batteries of the emergency power system (220 V, ±24 V) is listed above in the answer to section 5.1.2.

KKB

If no AC power supply is available (excluded the uninterruptible AC power) and the connection to the emergency grid also fails, the steam will be released to the wetwell (pressure limitation by safety relief valves and/or diverse UNS-motor-driven safety

valves) and the feeding of the reactor pressure vessel will be carried out by the steam-driven high-pressure coolant injection system (with cooling water from the wetwell). The control system of the steam driven pump is dependent on the unit batteries. If the wetwell achieves the boiling point or the unit batteries fail the feeding of the reactor pressure vessel has to be continued with a mobile pump from the demineralized water inventory/drinking water/river water. To reduce the pressure in the reactor vessel an (automatic) depressurisation has to be performed.
For containment heat removal and to avoid containment over-pressurization failure the filtered containment venting is possible (battery supply is necessary).
The residual heat from the spent fuel pool can be removed by evaporation. The evaporation losses can be made up by mobile pump(s).
The discharge time of the batteries of the emergency power system (220 V, ±24 V) is listed above in the answer to section 5.1.2 and the discharge time of the UNS-batteries (220 V, ±24 V) is at least 3 hours. The discharge time of the different UNS-batteries in the different trains can be longer. With manual measures like for example switch-off of unnecessary loads these discharge times can be increased.

PWR construction line 1:

KWO

See answer to section 5.1.1.

5.1.4 Conclusion on the adequacy of protection against loss of electrical power

The robustness of the plants for loss of off-site power condition, for loss of off-site power condition with loss of the ordinary back-up AC power and in addition with loss of permanently diverse back-up AC power sources was reassessed. In this case it was assumed that the off-site power is lost for several days and that the site is isolated from delivery of heavy materials for 72 hours by road, rail or waterways. Moreover, it was implied that portable light equipment can arrive to the site from other locations at the earliest after 24 hours.

For the electrical supply of the unit all German NPPs have at least three off-site power supply possibilities. These supplies are in minimum the main grid connection, the standby grid connection and the emergency grid connection.
In an undisturbed operation the unit supplies their electrical power into the main grid. An electrical supply from the main grid is also possible. If the main grid isn't available, all German NPPs have the ability of load rejection to house-load operation. Is that load rejection unsuccessful an automatic switchover of the station supply to the standby grid connection happens. If this connection is also unavailable the emergency power system of the plants automatically takes over the electrical supply of the safety-related trains.
Each emergency power system of the German NPPs has at least four emergency diesel generators. Furthermore, in most NPPs a second emergency power system with up to four additional emergency diesel generators is available.
If all these supply alternatives fail, the different plants have additionally a battery secured DC and AC power supply, which enables together with accident management measures the removal of the residual heat. Also in most NPPs a mobile diesel is available to recharge the batteries or to supply selected pumps/components.

The licensees come in their assessments to the summary, that it can be stated on account of the design and build and the existing plant operating and accident management measures, that the plants have a high defence against the loss of power and its consequences.

5.1.5 Measures which can be envisaged to increase robustness of the plants in case of loss of electrical power

On account of the margins for safeguarding the power supply as indicated, also taking superimposed events (earthquake, flooding, extreme weather conditions) into consideration, no need for measures to further increase the robustness were identified by the licensees within the framework of the arranged reassessments.

On the contrary, in view of the events in the Fukushima NPP the robustness of the design principles of the German plants has been reconfirmed. Notwithstanding the above, for the future the most licensees want to keep a mobile diesel generator on-site with the objective of even further developing the robustness of the AC power supply and thus also the DC power supply. In addition, the concept of this mobile power supply is to be further developed in technical and administrative respects.
Furthermore, the topic to prolong the discharge time of the unit batteries is under discussion.

KBR

In addition to the measures above for KBR feasibility studies are under way to increase the robustness of the power supply for the accident management measure ‘primary bleed and feed’ and to protect additional diesel supplies against external events. Furthermore, it is planned to install a mobile pump for feeding the steam generators (e.g. for the accident management measure ‘secondary bleed and feed’) protected against external events inside the emergency feed water building.

KKU

In addition to the measures above KKU has been applied measures aimed at using a fire water pump to sustain low-pressure feed to the emergency feed power system or to the emergency condition diesel system even under harsh ambient conditions. This would provide two more options of heat removal in case the accident management measure ‘secondary feed and bleed’ fails.

KKI-1

In addition to the measures above KKI-1 has plans for installing two new emergency diesel generator buildings and for replacing the water-cooled emergency diesel generators with new air-cooled, diverse units.

5.1.6 Assessment and conclusions of the regulator

Status of the documents presented by the licensees

The documents that are the basis for the assessment have been classified by the licensees according to their degree of approval in the regulatory process. The Länder authorities in general confirm the appropriateness of the classification. Differing classifications that occurred in some cases have no influences on the overall validity of the assessments.

Assessment of the regulator

The Länder authorities confirm that the reports of the licensees essentially conform to the ENSREG requirements. However, due to the tight schedule of the stress test quantitative assessments of safety margins were not always feasible.

The Länder authorities basically confirm the information and assessments provided by the licensees. This holds in particular for the information regarding the licensing basis. The defence of the plants against the loss of power and possible consequences is confirmed by the Länder authorities.

In general, the assessments of safety margins are plausible, but cannot be verified in line with the normal regulatory standards. There are no specified evaluation standards for the robustness and also not all information necessary for an evaluation is provided.

For the following plants additional statements are given by the Länder:

KWB-A/B: The licensee reports a discharge time of the separated batteries from the 'additional independent secondary feed water system' of more than 30 hours. The Länder authority can not confirm this value based on the available documentation.

GKN and KKP: A potential for improvement of procedures for low power shutdown states and the cooling of the spent fuel pool was pointed out, see chapter 6.

Conclusions

In the current view, the licensees indicate that no measures to further increase the robustness are necessary. The Länder authorities confirm this conclusion for the most parts.

For the following plants additional statements are given by the Länder:

KBR: The licensee currently performs feasibility studies to increase the AC power supply robustness. At the time being, no assessment of the adequacy of these improvements can be given by the Länder authority.

KKU: The licensee has applied for measures aimed at using a fire water pump to sustain low-pressure feed to the emergency feed power system or to the emergency condition diesel system even under harsh ambient conditions. According to the first evaluation of the Länder authority these measures are plausible in view of the feasibility and adequacy.

KWB-A/B: To improve the effectiveness of the severe accident management a manual for mitigative emergency control should be prepared.

KKB: The assessment of the Länder authority shows potential to improve the DC current supply of the emergency power system.

5.2 Loss of the ultimate heat sink

In the German nuclear power plants, the situation regarding the design of the component cooling systems (CCS) and essential service water systems (ESWS) differs from site to site. The regulations principally demand an n+2 redundant design for active components of the safety relevant (essential) service water systems /5.7/. So far, there is no requirement in the regulations for a diverse (alternate) heat sink; nevertheless, for some plants the possibility exists to remove the lost and decay heat to a heat sink that is independent of the river, such as wellwater which is used for the required systems to be cooled in some cases in combination with a multiple-cell cooling tower.

For PWR plants, it has to be taken into account in the event of a loss of the essential service water supply during power operation that there is no challenge of the residual-heat removal (RHR) chain as steam generator feeding is carried out by corresponding sys-tems. In shutdown condition, the residual heat is removed via a residual-heat removal chain to the river water. The same applies to the heat generated in the spent fuel pool and the heat loss involved in the operation of safety-relevant components such as die-sels and electric motors. The supply units such as pumps, diesel engines and pipes are protected by physical separation and/or bunkering in such a way that in the event of an external impact (aircraft crash, explosion), at least one train will remain available for residual-heat removal (emergency residual-heat removal chain). The electric power for the emergency residual-heat removal chains is supplied from the installations in the emergency feedwater buildings (PWR) or from the additional emergency diesels that are protected against external hazards (BWR).

The information listed in the following chapters 5.2.1, 5.2.2, 5.2.3 is a brief compilation of the main aspects of the licensees' answers to the ENSREG questions. A comprehensive evaluation of the safety status of the NPPs is possible on the basis of the complete answers only. For detailed description of the design of the essential service water system see licensees reports.

5.2.1 Design provisions to prevent the loss of the primary ultimate heat sink, such as alternative inlets for sea water or systems to protect main water inlet from blocking

PWR plants:

GKN-II, KKE
The ESWS consists of 4 trains (4 x 50% system). In these plants the primary ultimate heat sink for the ESWS consists of cell cooling towers. Coolant loss due to vaporisation can be replenished from different sources e.g. secured well-water or demin-water facility. In case of loss of the ESWS, a 2 train emergency ESWS (2 x 100% system) for RHR is available, 2 pumps in two separate pump chambers. The heat sink for the emergency ESWS is the river (alternate heat sink).

KKP-2
The ESWS consists of 4 trains (4 x 50% system), 4 pumps in two separate pump chambers, heat sink is the river. In case of loss of the ESWS, a 2 train emergency ESWS (2 x 100% system) for RHR is available, 2 pumps in two separate buildings. The heat sink for the emergency ESWS is also the river.

Furthermore an alternate 2 train emergency ESWS (2 x 100% system) for RHR is installed. The coolant source for this additional system is the well (alternate heat sink).

KBR, KWG
The ESWS consists of 4 trains (4 x 50% system), 4 pumps in two separate pump chambers, heat sink is the river. In case of loss of the ESWS, a 2 train emergency ESWS (2 x 100% system) for RHR is available, 2 pumps in two separate pump chambers. The heat sink for the emergency ESWS is also the river.
Furthermore an additional (reserve) ESWS (2 x 100% system) with to underwater pumps for RHR is installed. The coolant source for this additional system is also the river.

KKI-2, KKG
The ESWS consists of 4 trains (4 x 50% system), 4 pumps in two separate pump chambers, heat sink is the river. In case of loss of the ESWS, a 2 train emergency ESWS (2 x 100% system) for RHR is available, 2 pumps in two separate pump chambers. The heat sink for the emergency ESWS is also the river.

KKU
The ESWS consists of 4 trains (4 x 50% system), 4 pumps in 4 separate pump chambers, heat sink is the river. In case of loss of the ESWS, a 1 train emergency condition ESWS (1 x 100% system) for RHR is available. This system is protected against external events. The heat sink for the emergency condition ESWS is also the river.

GKN-I, KWB-A, KWB-B
The ESWS consists of 4 trains (4 x 50% system), 4 pumps in two separate pump chambers. Heat sink is the river.

KWO (decommissioned PWR plant)
2 x 100% RHR system for spent fuel cooling. The heat sink is ensured by cell cooling towers. Coolant loss due to vaporisation can be replenished from different sources.

BWR plants:

KKB
The ESWS consists of 4 trains (4 x 50% system), 4 pumps in one pump building. The primary ultimate heat sink is the river.
In addition, an independent emergency RHR system (2 x 100% system) is installed in a separate building. The heat sink for this system is ensured by cell cooling towers. Coolant loss due to vaporisation can be replenished from different sources.

KKP-1
The ESWS for RHR consists of 4 trains (4 x 50% system), 4 pumps in two separate pump chambers. The ESWS for emergency diesel cooling consists of 2 trains (2 x 100% system), 2 pumps in two separate pump chambers.The primary ultimate heat sink is the river.
In addition, an independent emergency RHR system (2 x 100% system) is installed in a separate building (USUS). The heat sink for this system is ensured by water from a well or the river.

KKI-1
The ESWS for RHR consists of 4 trains (4 x 50% system), 4 pumps in two separate

pump chambers. The service water supply for emergency diesel cooling consists of 3 trains. Two of the 4 emergency diesel generators can be cooled separately by their own ESWS. The water intake is ensured by a river dam.
In case of loss of the water intake, water can be sucked from a pump building near the river weir Niederaichbach (downriver of the ESWS pump building) by 2 emergency power supplied essential service water pumps to supply the ESWS.

KKK
The ESWS for RHR consists of 4 trains (4 x 50% system), 4 pumps in two separate pump buildings, distance between the pump buildings 40 m.

KRB II-B, KRB II-C
The ESWS for RHR consists of 3 trains (3 x 100% system), 3 pumps in 3 separate pump buildings.
In addition, an independent emergency RHR system (AHRS) (1 x 100% per unit) is installed in a separate building. The heat sink is ensured by a cell cooling tower. Coolant loss due to vaporisation can be replenished from different sources.

5.2.2 Loss of the primary ultimate heat sink (e.g., loss of access to cooling water from the river, lake or sea, or loss of the main cooling tower)

PWR plants:

Power operation or plant shutdown, primary circuit closed:

GKN-II, KKI-2, KKE, KKP-2, KKG, KBR, KWG
An independent bunkered (protected against aircraft crash, external explosion, earthquake) 4 train emergency feedwater system for heat removal via the steam generators to the atmosphere is available. The ESWS is not required to ensure the residual heat removal. The emergency feedwater tanks can be refilled from different sources.

KKU
An independent additional 2 train emergency condition feedwater system for heat removal via the steam generators to the atmosphere is available. These trains are protected against external events. The ESWS is not required to ensure the residual heat removal. The emergency condition feedwater tanks can be refilled from different sources.

KWB-A, KWB-B
An independent additional 2 train emergency feedwater system (2 trains for both units) for heat removal via the steam generators to the atmosphere is available. The ESWS is not required to ensure the residual heat removal. The feedwater tanks can be refilled from different sources. In addition, 2 steam generators can be fed from the emergency feedwater system of the twin unit (not available in case of loss of ultimate heat sink in the twin unit).

GKN-I
A four train emergency feedwater system for heat removal via the steam generators to the atmosphere is available. The ESWS is not required to ensure the residual heat removal. The emergency feedwater tanks can be refilled from different sources.

Plant shutdown, primary circuit open:

KKE, GKN-II, GKN-I, KKP-2, KWB-A, KWB-B
In these plants an alternate ultimate heat sink is available for the heat removal from the primary circuit. KKE, GKN-II: in case of complete failure of the 4x50% cell cooling towers the river is the alternate heat sink or vice versa; GKN-I, KKP-2, KWB-A, KWB-B: for these plants the well feeds the coolers of ESWS. In the plants GKN-I, KWB-A, KWB-B additional operator actions, i.e. installation of flexible tube connections (well – fighting water pump – heat exchanger) are necessary to continue the RHR.

KKI-2, KKG, KBR, KWG, KKU
Accident management measures are available to ensure the residual heat removal. The residual heat can also be removed by vaporisation of the primary coolant and injection of water from different sources (flooding with RHR-system or mobile pumps).

Spent fuel pool cooling:

KKE, GKN-II, GKN-I, KKP-2, KWB-A, KWB-B
In these plants an alternate ultimate heat sink is available for the heat removal from the spent fuel pool. KKE, GKN-II: in case of complete failure of the 4x50% cell cooling towers the river is the alternate heat sink or vice versa; GKN-I, KKP-2, KWB-A, KWB-B: for these plants the well feeds the coolers of ESWS. In the plants GKN-I, KWB-A, KWB-B additional operator actions, i.e. installation of flexible tube connections (well – fighting water pump – heat exchanger) are necessary to continue the spent fuel pool cooling.

KKI-2, KKG, KBR, KWG, KKU
Accident management measures are available to ensure the residual heat removal. The residual heat can also be removed by vaporisation of the spent fuel pool coolant and injection of water from different sources (RWSTs via RHR-system, mobile pumps).

KWO (decommissioned plant)
In case of loss of the primary ultimate heat sink, very long time spans are available for counter measures, 5 days to 60°C coolant temperature in the spent fuel pool, 75 days to uncovering of fuel elements.

BWR plants:

Power operation or plant shutdown, RPV closed or open:

KKB
An independent emergency RHR system (2 x 100% system) is installed in a separate building. The heat sink is ensured by cell cooling towers. Coolant loss due to vaporisation can be replenished from different sources (e.g. mobile pump, water supply system).

KKP-1
An independent emergency RHR system (2 x 100% system) is installed in a separate building. The heat sink is ensured by water from a well or from the river.

KKI-1
In case of loss of the water intake (e. g. by dam failure), water can be sucked from a

pump building near the river weir Niederaichbach (downriver of the ESWS pump building) by 2 emergency power supplied essential service water pumps and supplied to the ESWS pump building.
In case of complete loss of the access to cooling water from the river, accident management measures are available to ensure the decay heat removal (depressurization of the reactor coolant system, water injection from different sources e. g. by a turbo pump [available in case of accidents during power operation], fire fighting water pumps or mobile pumps, filtered containment venting).

KKK
In case of complete loss of the access to cooling water from the river, accident management measures are available to ensure the decay heat removal depressurization of the reactor coolant system, water injection from different sources e. g. by turbo pump [available in case of accidents during power operation], fire fighting water pumps or mobile pumps, filtered containment venting).

KRB II-B, KRB II-C
An independent emergency RHR system (AHRS) (1 x 100% per unit) is installed in a separate building. The heat sink is ensured by a cell cooling tower. Coolant loss due to vaporisation can be replenished from different sources (e.g. mobile pump, water supply system).

<u>Spent fuel pool cooling:</u>

KKB
Connection between spent fuel pool and reactor basin open: The spent fuel pool cooling can be ensured by the independent emergency RHR system (2 x 100% system). The heat sink is ensured by cell cooling towers. Coolant loss due to vaporisation can be replenished from different sources (e.g. mobile pump, water supply system).
Connection between spent fuel pool and reactor basin closed: The heat exchanger for spent fuel pool cooling can be supplied form the firefighting water system.

KKP-1
In case of complete loss of access to cooling water from the river, the heat exchanger for spent fuel pool cooling can be supplied from the firefighting water system.

KKI-1
In case of complete loss of access to cooling water from the river, the heat exchanger for spent fuel pool cooling can be supplied from different sources (e.g. by firefighting water system or mobile pumps).

KKK
In case of complete loss of access to cooling water from the river, the heat exchanger for spent fuel pool cooling can be cooled by a mobile pump.

KRB II-B, KRB II-C
The independent emergency RHR system (1 x 100% per unit) is available to ensure the heat removal from the reactor coolant circuit and the spent fuel pool via the wetwell. The heat sink is ensured by a cell cooling tower. Coolant loss due to vaporisation can be replenished from different sources (e.g. mobile pump, water supply system).

5.2.3 Loss of the primary ultimate heat sink and the alternate heat sink

PWR plants:

Power operation or plant shutdown, primary circuit closed:

GKN-II, KKI-2, KKE, KKP-2, KKG, KBR, KWG
The complete failure of the independent bunkered (protected against aircraft crash, external explosion, earthquake) 4 train emergency feedwater system is extremely unlikely. In this case, the heat removal via the steam generators to the atmosphere can be ensured by the accident management measure “secondary bleed and feed”. For depressurisation of the steam generators the pressure relief valves or the safety valves will be opened. Coolant will be injected from the feedwater storage tank and in the long run from different sources with mobile pumps.

KKU, KWB-A, KWB-B
In the unlikely case of complete failure of the independent additional 2 train emergency feedwater system, the heat removal via the steam generators to the atmosphere can be ensured by the accident management measure “secondary bleed and feed”. For depressurisation of the steam generators pressure relief valves or the safety valves will be opened. Feedwater supply is available from different sources and can be injected from different sources with mobile pumps.

GKN-I
In the unlikely case of complete failure of the 4 train emergency feedwater system, the heat removal via the steam generators to the atmosphere can be ensured by the accident management measure “secondary bleed and feed”. For depressurisation of the steam generators pressure relief valves or the safety valves will be opened. Feedwater supply is available from different sources and can be injected from different sources with mobile pumps.

All PWR plants
If the accident management measure “secondary bleed and feed” was not successful, additional time for further measures can be obtained by the accident management measure “primary bleed and feed”.

Plant shutdown, primary circuit open:

In case of complete loss of the primary ultimate heat sink and the alternate heat sink, accident management measures are available to ensure heat removal from the primary circuit. The decay heat can also be removed by vaporisation of the reactor coolant and injection of water from different sources (flooding with RHR-system, mobile pumps).

Spent fuel pool cooling:

In case of complete loss of the primary ultimate heat sink and the alternate heat sink, accident management measures are available to ensure heat removal from the spent fuel pool. The decay heat can also be removed by vaporisation of the spent fuel pool coolant and injection of water from different sources (e. g. from the RWSTs via RHR-system, mobile pumps).

KWO (decommissioned plant)
In case of loss of the primary ultimate heat sink, very long time spans are available for counter measures, 5 days to 60°C coolant temperature in the spent fuel pool, 75 days to uncovering of fuel elements.

BWR plants:

Power operation or plant shutdown, RPV closed:

KKB, KKP-1
The loss of the ESWS and the independent emergency RHR system (2 x 100% system) is extremely unlikely. For this case accident management measures are available to ensure the decay heat removal (depressurization of the reactor cooling system, water injection from different sources e. g. injection by mobile pumps, heat removal by filtered containment venting).

KKI-1, KKK
For this case accident management measures are available to ensure the decay heat removal (depressurization of the reactor cooling system, water injection from different sources e. g. injection by mobile pumps, heat removal by filtered containment venting).

KRB II-B, KRB II-C
The loss of the ESWS and the independent emergency RHR system AHRS (1 x 100% per unit) is extremely unlikely. For this case accident management measures are available (depressurization of the reactor cooling system, water injection from different sources e. g. injection by mobile pumps, heat removal by filtered containment venting).

Plant shutdown, RPV open:

In case of complete loss of the primary ultimate heat sink and the alternate heat sink, accident management measures are available to ensure heat removal from the reactor coolant circuit. The decay heat can be removed by vaporisation of the reactor coolant and injection of water from different sources (e. g. mobile pumps, fire fighting water pumps).

Spent fuel pool cooling:

In case of complete loss of the primary ultimate heat sink and the alternate heat sink, accident management measures are available to ensure heat removal from the spent fuel pool. The decay heat can be removed by vaporisation of the spent fuel pool coolant and injection of water can be provided from different sources with mobile pumps or fire fighting water pumps.

5.2.4 Conclusion on the adequacy of protection against loss of ultimate heat sink

For the PWR plants during power operation and as long as the reactor pressure vessel is closed a diverse heat sink is available by heat removal via the steam generators to the atmosphere. For steam generator feeding adequate systems are installed, which do not require service water.

In some plants, an alternate ultimate heat sink is installed (well: KKP-1, KKP-2 or cell cooling tower: GKN-II, KKE, KKB, KRB II-B, KRB II-C) and in case of loss of the ultimate heat sink the heat removal can be continued immediately by switch over to the alternate heat sink.

In some other plants the alternate ultimate heat sink can be assured by additional operator actions, i.e. by installation of flexible tube connections (well – fire fighting water pump – heat exchanger: GKN-I, KWB-A, KWB-B).

In the remaining PWR plants (KKU, KKG, KBR, KWG, KKI-2), accident management measures (secondary bleed and feed, primary bleed and feed) are available to ensure the residual heat removal in all plant operational states. In the remaining BWR plants (KKK, KKI-1), accident management measures (depressurization of the reactor cooling system, water injection from different sources, heat removal by filtered containment venting) are available for residual heat removal.

Generally, accident management measures are available in all German NPPs to ensure the residual heat removal in all plant operational states in case of complete loss of the ultimate heat sink and the alternate heat sink.

For the 8 plants in shut down (GKN-I, KWB-A, KWB-B, KKU, KKB, KKP-1, KKI-1, and KKK), due to the relatively low residual decay heat, long time spans (several days) are available for counter measures and to restore the failed systems for cooling of the fuel elements. For the KWO plant (in decommissioning) due to the relatively very low residual decay heat, very long time spans (several weeks) are available for counter measures and to restore the failed systems.

In any case, the complete loss of the ultimate heat sink can be coped with in all German NPPs.

5.2.5 Measures which can be envisaged to increase robustness of the plants in case of loss of ultimate heat sink

In most of the units no further measures are foreseen to increase the robustness of the plants in case of loss of the ultimate heat sink.

The licencee for KKU applied for an external feeding of the ESWS by a pump dredger ship.

5.3 Loss of the primary ultimate heat sink, combined with station black out (see stress tests specifications)

Chapter 5.1.3 describes the emergency measures by loss of off-site power and loss of the ordinary back-up AC power sources, and loss of permanently installed diverse back-up AC power sources. Most of these measures are independent of the primary ultimate heat sink. Therefore the appropriate aspects of this chapter (5.3) are covered by the considerations of chapter 5.1.3 and will not be listed here again.

5.4 Assessment and conclusions of the regulator

5.4.1 Status of the documents presented by the licensees

The documents that are the basis for the assessments have been classified by the licensees according to their degree of approval in the regulatory process. The Länder authorities in general confirm the appropriateness of the classification. Differing classifications that occurred in some cases have no influence on the overall validity of the assessments.

5.4.2 Assessment of the regulatory body

The Länder authorities confirm that the reports of the licensees essentially conform to the ENSREG requirements. Further on the Länder authorities basically confirm the information and assessments provided by the licensees. This holds in particular for the information regarding the licensing basis. The defence of the plants against the loss of ultimate heat sink and possible consequences is confirmed.

In general, the assessments of safety margins was correctly described or made plausible, but cannot be verified in line with the normal regulatory standards, because necessary in-depth analyses or documentation is missing. There are no specified evaluation standards for the robustness and also not all information necessary for an evaluation is provided.

For the following plants additional statements are given by the Länder:

GKN and KKP: A potential for improvement of procedures for low power shutdown states and the cooling of the spent fuel pool was pointed out, see chapter 6.

For the units KWB-A and KWB-B further analyses of the shutdown operation and the availability of the firefighting water system for residual heat removal in case of loss of external power supply are necessary for a complete assessment.

KWB-A: The ESWS feeding lines to the emergency diesel generators and the intermediate cooling circuit to the RHRS partially consists of two trains (2x100% piping).

5.4.3 Conclusions

The activities mentioned above will be dealt with in the scope of the regulatory oversight process, conducted by the Länder authorities.

On request by BMU, the German Reactor Safety Commission (RSK) is analysing the necessity of further measures to increase the robustness of the plants which have no alternate ultimate heat sink (well or cell cooling tower) installed. Measures will be taken depending on the RSK recommendations (not yet published).

In addition the German Regulatory Body is presently analysing the necessity to require a diverse ultimate heat sink.

References

Chapter 5.1: Loss of electrical power

/5.1/ Nuclear Safety Standards Commission (KTA)
KTA 3701 – General Requirements for the Electrical Power Supply in Nuclear Power Plants
Version 06/99

/5.2/ Nuclear Safety Standards Commission (KTA)
KTA 3702 – Emergency Power Generating Facilities with Diesel-Generator Units in Nuclear Power Plants
Version 06/00

/5.3/ Reactor Safety Commission (RSK)
Results of the Safety Review of Nuclear Power Plants in the Federal Republic of Germany by the RSK
11/88

/5.4/ Nuclear Safety Standards Commission (KTA)
KTA 3703 – Emergency Power Facilities with Batteries and AC/DC Converters in Nuclear Power Plants
Version 06/99

/5.5/ Nuclear Safety Standards Commission (KTA)
KTA 3704 – Emergency Power Facilities with DC/AC Converters in Nuclear Power Plants
Version 06/99

/5.6/ Federal Ministry for the Environment, Nature Conservation and Nuclear Safety (BMU)
Convention on Nuclear Safety
Report by the Government of the Federal Republic of Germany for the Fifth Review Meeting in April 2011

Chapter 5.2: Loss the of heat sink

/5.7/ Nuclear Safety Standards Commission (KTA)
KTA 3301 –Residual Heat Removal Systems of Light Water Reactors
Version 06/99

6 Severe accident management

In response to the severe accidents at Three Mile Island and especially after the Chernobyl accident in 1986, the German Reactor Safety Commission (RSK) was asked to check whether any measures to enhance the NPPs safety and to cope with severe accidents are possible and if so, what these measures could be /6.1/. The results of the German Risk Study „Deutsche Risikostudie Kernkraftwerke - Phase B“ (1981-1989) /6.7/, the first large comprehensive study including deterministic and probabilistic results of severe accidents based on a PWR reference plant, significantly influenced the development w.r.t. severe accident management in Germany.

First requirements for a Severe Accident Management (SAM) program regarding beyond-design-basis events starting from power operation only were published in autumn 1988 after intensive discussions within the RSK /6.1/. The concept was called “Anlageninterner Notfallschutz”, and the primary intention was the prevention of severe accidents starting at power operation. Some selected mitigative measures for dominating phenomena were proposed as well. For both necessary hardware modifications have been considered. The filtered containment venting system was one of the systems which was recommended and installed very early, in the late 1980s /6.2, 6.3/. In the following, reference is made to the major relevant RSK decisions relating to Accident Management:

- Containment isolation, RSK Recommendation, 218th meeting 17-12-1986 /6.1/
- Filtered venting of PWR containment, 218th meeting, 17-12-1986 /6.1/
- Filtered venting of BWR containment, 222nd meeting, 24-06-1987 /6.1/
- N_2 inertisation of BWR containment, 218th meeting 17-12-1986 /6.1/
- Start of detailed discussions about accident management 1987/88;
  i.a. development of an Accident Management Manual, 226th meeting, 21-10-1987
- Additional RPV injection or refilling options (BWR), 226nd meeting, 21-10-1987
- Electrical power supply, 226nd meeting, 21-10-1987
- Secondary-side and primary-side bleed and feed (PWR), 233rd meeting, 22-06-1988,
- Diverse RPV pressure limitation for BWR, from 1989 onwards
- RSK Position Paper on accident management (273rd meeting), 1992 /6.4/
- Hydrogen recombination, RSK Position Paper, 314th meeting, 17-12-1997 /6.5/
  (Discussions since around 1987 regarding igniters or passive autocatalytic recombiners or dual concept)

Additional information was compiled by KTA in 1996 /6.28/.

The final RSK recommendation regarding a Severe Accident Management Program was published in 1992 /6.4/ and provided all details for SAM concepts to be developed and implemented by the licensees to deal with severe accidents starting from full power operation. The basic principles of the SAM-concept are described below:

„The goals of plant-internal accident management measures are to prevent serious degradation of the reactor core as well as to reduce the effects of extremely improbable events beyond the design basis on the environment of nuclear power plants to such a degree that serious effects are limited to the plant itself. …

Beyond the three classical safety levels of reactor safety, additional measures of a new quality have been created in the postulated realm beyond the design basis by utilizing of design margins and by the deployment of all system technological means by the operating personnel. Hereby, the concept for the control and mitigation of design basis accidents remains fully functional. The plant-internal accident management measures do not serve as a replacement for the measures within the framework of nuclear power plant design. Plant-internal accident management measures do serve as "ultima-ratio" measures, already due to the hypothetical accident postulates on which they are based. Their primary goal is the protection of the environment of a nuclear power plant even in case of these postulated extreme accidents.

In these situations, this goal must have priority over other goals such as protection of the components. This may also lead to a change of priorities as specified in the fundamental safety function concept. Even the question of what tasks the operating personnel may be allowed to performed an shall perform with top priority, generally, has to be answered differently with regard to plant-internal accident management measures than with regard to the control of design basis accidents.

Under these circumstances, the safety equipment, the operating systems and external systems may have to be deployed outside of their regular range of application. An impairment of normal functioning or even damages might have to be tolerated in order to achieve the superordinate fundamental safety functions mentioned above in these extreme situations. Furthermore, accident management measures must have priority over any competing actions of the reactor protection system and over any interlocks. Even manual interactions with the reactor protection system must be permitted if plant-internal accident management measures so require.

With increasing departure from the design range, the protective measures, generally, must become coarse grained with respect to simplicity and effectivity. This means, that they must be designed to cover a wide spectrum of event sequences. This is accounted for by the fact that accident management measures are directed only toward maintaining the superordinate fundamental safety functions (subcriticality, reactor core cooling, limitation of radioactivity release). Hereby, flexible actions, knowledge of the deployable means and a physically well-founded understanding of the superordinate interconnections are of higher importance. The design of components and systems employed in plant-internal accident management shall be based on generally valid scientific engineering principles. The RSK does not consider it expedient to apply the standards used in designing the safety systems (e.g. KTA safety standards). Possible accident management measures shall be carefully planned, shall be specified in an Accident Management Manual and shall be practiced - as far as possible.

Plant-internal accident management differentiates between measures for the prevention of serious core degradation and those for the limitation of radiological consequences due to serious core degradation. …

The goal of plant-internal accident management measures for the prevention of serious core degradation is, therefore, to maintain or re-establish cooling of the reactor core even when first damages to the core have already occurred. There are considerable

variations in the details of these events beyond the design basis. The accident management measures in their fundamental safety function orientation must, therefore, cover as broad a spectrum of accident scenarios as possible. …

In this hypothetical accident scenario, the accident management measures for the mitigation of radiological consequences must be concentrated on the fundamental safety function of maintaining whatever is still available of the radioactivity enclosing barriers and on securing a controlled condition for protecting the environment over a long period of time. Examples for this are measures for preventing core meltdown under high pressure, for an early reduction of hydrogen in the containment as well as for preventing an overpressure failure of the containment by a filtered depressurisation. …

Events beyond the design basis that are representative of a whole spectrum of events differing in detail can be identified and described with the aid of probabilistic safety analyses, of operating experiences, of results from reactor safety research and of postulated damages in the plant. The plant-internal accident management measures for these representative events shall be prepared utilizing to a great extent the available equipment and systems.

The specified accident management measures shall be analysed for their effectiveness, for the feasibility of their implementation and for their compatibility with plant safety. Beyond this, the RSK does not consider it necessary for a probabilistic assessment of the reliability of accident management measures to be carried out. This applies in particular to simple measures for whose preparation and execution sufficient time would be available.

The extent and depth of analytical proofs can be oriented on the (limited) possibilities for the analyses of accident management measures.

On the other hand, practical reasoning already sets limits to the extent of the analysis and consideration of event sequences. In the opinion of the RSK, a line should be drawn where the plausible proof of the effectiveness of a plant-internal accident management measure is followed in turn by again other postulations of failures in that respective system. These kinds of event sequences can, in all probability, be ruled out."

Later on in 1997, another RSK recommendation was published /6.5/, dealing with hydrogen countermeasures, especially the installation of PARs in large dry German PWR containments. Important aspects are described below:

„To further reduce the risk of an early or late loss of integrity of the containment vessel of pressurized water reactor plants as a result of hydrogen combustion processes associated with events going beyond the design basis, the RSK recommends the installation of passive autocatalytic recombiners as a plant-internal accident management measure. These devices recombine hydrogen well before flammability limits are reached, and do so even in gas mixtures inerted by steam. In this way, the safety-relevant part of the hydrogen volume released can be recombined within only a few hours, and a major contribution is, thus, made to ensuring containment integrity and, hence, to further risk minimisation. Catalytic recombination clearly is a safety-oriented measure for the control of hydrogen produced in events going beyond the design basis. A PAR concept is in agreement with the overall plant safety concept. These recombiners can be built into existing pressurized water reactor plants without any safety

problems. The RSK suggests that the design of catalytic recombiners be optimized with respect to the specified performance envisaged.

The number of catalytic recombiners to be installed in a containment vessel, and their locations, must be determined taking the hydrogen release rates and characteristic gas transport times within the containment into account. On the basis of present knowledge, it is possible to sufficiently accurately determine by numerical analysis with lumped parameter codes and engineering estimates the distribution of hydrogen determining the number and the locations of the required recombiners. The RSK assumes that the analysis results are further supported by CFD code analysis.

The determination of the number of PARs and its position in Pre-Konvoi PWR NPPs, which are not identically to the reference plant, can be done by a Δ-procedure. For older units additional analyses are recommended using the existing know-how. The RSK believes that the „lumped parameter“ code RALOC using a validated input deck is an appropriate code for such additional analyses.

Random samples of catalyst modules should be examined annually to demonstrate their catalytic activity and to exclude environmental influences on its performance.

The RSK examined whether it is necessary to supplement the catalytic recombination by additional measures and concluded finally that this is not necessary.”

Filtered venting of PWR containments was decided already at the 218th RSK meeting, 17-12-1986 /6.1/. Important aspects are described below:

„For this extremely improbable case *(remark: long-term containment pressure increase in case of a core melt accident)*, the RSK recommends the depressurisation of the containment vessel via high efficiency particulate air filters. Important aspects are described below:

a) Design and Set-points for Operation

- *Opening approximately at the testing pressure level of the containment vessel*
  - *Pressure limitation when depressurizing without water insertion into the containment vessel*
  - *Pressure reduction (orientation value) to a level of about one half the testing pressure of the containment vessel within about two days*
- *Design of the valves to be closable even at the testing pressure of the containment vessel*
- *Design of the valves for a stepwise opening and closing*
- *Activation of the possibilities for water insertion into the containment vessel from the moment on of depressurisation in order to compensate for the released amount of water (to prevent dry-up of the sump).*

b) Loads to be Considered

- *Out to the outer or second of the double closure valves: failure pressure of the containment vessel or, alternatively, twice the design pressure*

- *For the adjacent system:*
  - *Pressure, temperature and composition of the mixture that would develop and flow though the maximum valve cross-section corresponding to the accident conditions*
  - *Design margins for the pipes and supports to take dynamic loads into consideration, or, alternatively, a safety margin of 2 with regard to the operating loads.*

c) Construction Requirements

- *Preferably a stationary installation of the system components downline from the closure valves: depending on the design solution, connection of the downline system component by an adapter that will be installed on demand*
- *In-line closure valves that, if required from the standpoint of accessibility, shall be remotely controlled and have an available power supply in the case of required operation. It may be assumed that at the point in time of the depressurisation after several days, a neighbouring mains grid supply with the required power, or the emergency power supply, will again be available.*
- *Removal of the condensate accumulating along the pressure relief path*
- *A high-efficiency particulate air filtration system kept in readiness at the site of the power plant.*

The RSK is convinced of the effectiveness of the concept of depressurisation of PWR containment vessels and recommends its technical realisation in accordance with the requirements specified above.“

For BWRs, N_2 inertisation of the containment was implemented where possible /6.1/. Important aspects are described below for BWR type 69:

„The licensees/operators of the boiling water reactors of the construction line 69 have suggested a concept for the inertisation of the containment vessel; this has been evaluated by the RSK.

Build-up of, and maintaining, an inert condition of the containment vessel atmosphere is possible even during specified normal operation. Therefore, the inertisation concept must take into account the accessibility of the containment vessel by personnel as required for safe operation. Requirements regarding inertisation are:

- *The inertisation of the containment vessel during start-up must be initiated at the latest when the intended long-term operating condition has been reached.*
- *The de-inertisation of the containment vessel should be initiated no earlier than 24 hours before initiation of the planned shutdown procedure.*
- *The residual O_2 content in the containment vessel should be such that hydrogen burning is prevented taking into consideration the mixture composition developing in an accident. The RSK considers a residual O_2 content of 4 % to be harmless.*
- *With regard to the control rod drive chamber, it either should be possible to momentarily de-inert this chamber separately from the remaining drywell, or it should never be inerted, provided, in case of an accident the concentration equalisation with the remaining drywell will lead to an adequate inertisation.*

- *In the case of reduction to partial power for the sake of in-service inspections and maintenance tasks, it must be possible to de-inert the drywell temporarily.*
- *In case of accidents the pumped re-insertion from the annulus leak-off system should be discontinued."*

Filtered venting of BWR containments was decided at the 222nd meeting, 24-06-1987 /6.1/. Important aspects are described below for BWR type 69:

„Just as with the recommendation for a filtered depressurisation of the containment vessel in pressurized water reactors, the RSK recommends that, within the framework of plant-internal accident management, a depressurisation system for the containment vessel of boiling water reactors of the construction line 69 is made available which shall meet the following requirements:

a) Design and Set-points for Operation

- *Opening approximately at a pressure level between the design pressure and testing pressure of the containment vessel*
- *Heat removal from the pressure suppression system via the volumetric flow shall correspond to at least the residual heat remaining after utilizing the entire heat capacity of the pressure suppression pool (wetwell)*
- *Valves designed to be closable even at the testing pressure of the containment vessel*
- *Valves designed for a stepwise opening and closing*
- *Possibility for water insertion into the venturi (steam) scrubber to compensate for water volume lost by evaporation due to the residual heat of the fission products retained in the hydraulic seal*
- *Possibility for sampling*
- *Determination of the amount released during depressurisation from the pressure at the orifice pressurized to a critical pressure ratio*
- *Determination of the radioactivity released during depressurisation, either directly or indirectly (e.g. by a detailed assessment)*

b) Loads to be Considered

- *Out to the outer or second of the double closure valves: failure pressure of the containment vessel or, alternatively, twice the design pressure*
- *For the adjacent system:*
  - *Pressure, temperature and composition of the mixture that would develop and flow though the maximum valve cross-section corresponding to the accident conditions*
  - *Design margins for the pipes and supports to take dynamic loads into consideration, or, alternatively, a safety margin of 2 with regard to the operating loads.*

c) Construction Requirements

- *Stationary installation of the system components downline from the closure valves*

- *In-line closure valves that, if required from the standpoint of accessibility, shall be remotely controlled and have an available power supply from the assured battery power supply.*
- *Stationary installation of a filter system (preferably a venturi scrubber with a down-line connected high efficiency particulate air filter)"*

The containments of the BWR type 72 differ considerably from those of the BWR type 69 (see for more details chapter 1). The licensee of BWR type 72 developed an inertization/recombination concept and a pressure suppression concept which took into account the differences of the plant design and considered the RSK recommendations. The concept was separately discussed and approved by the RSK /6.2/ and thereafter realized. Details of installed Accident Management measures can be found in chapter 1 along with the general PWR and BWR plant description, in the individual Licensees reports and as well in the following chapters.

In addition to these recommendations of the RSK the following documents are provided for defining alert criteria to be used in case of an emergency and for the organisation of external provision:

- RSK/SSK Recommendation: „Criteria for alerting civil protection authorities through operators of nuclear facilities" („Kriterien für die Alarmierung der Katastrophenschutzbehörde durch die Betreiber kerntechnischer Einrichtungen"), published July 2004 /6.26/
- Federal government - Länder committee for nuclear technology: „General Recommendations for the Disaster Control in the Vicinity of Nuclear Facilities" („Rahmenempfehlungen für den Katastrophenschutz in der Umgebung kerntechnischer Anlagen") issued 01.01.1989, updated 27.10.2008, /6.27/

In addition to the above mentioned RSK recommendations the German Nuclear Safety Standards Commission (Kerntechnischer Ausschuss - KTA) has issued nuclear safety standards for those topics in the area of nuclear technology where a consensus between experts of the manufacturers and the operators of nuclear power plants, of authorized experts and state officials is apparent and supports their application. Relevant KTA standards are:

- KTA 1201, Requirements for the Operating Manual, /6.12/
- KTA 1203, Requirements for the Accident Management Manual, /6.13/
- KTA 1501, Stationary System for Monitoring the Local Dose Rate within Nuclear Power Plants, /6.14/
- KTA 1502, Monitoring Radioactivity in the Inner Atmosphere of Nuclear Power Plants, /6.15/
- KTA 1503.1, Monitoring the Discharge of Gaseous and Aerosol-bound Radioactive Substances; Part 1: Monitoring the Stack Discharge of Radioactive Substances During Specified Normal Operation, /6.16/
- KTA 1503.2, Monitoring the Discharge of Gaseous and Aerosol-bound Radioactive Substances; Part 2: Monitoring the Stack Discharge of Radioactive Substances During Design Basis Accidents, /6.17/

- KTA 1503.3, Monitoring the Discharge of Gaseous and Aerosol-bound Radioactive Substances; Part 3: Monitoring the Non-stack Discharge of Radioactive Substances, /6.18/
- KTA 1504, Monitoring and Assessing of the Discharge of Radioactive Substances in Liquid Effluents, /6.19/
- KTA 1508, Instrumentation for Determining the Dispersion of Radioactive Substances in the Atmosphere, /6.20/
- KTA 3502, Accident Measuring Systems, /6.21/
- KTA 3901, Communication Means for Nuclear Power Plants, /6.22/
- KTA 3904, Control Room, Remote Shutdown Station and Local Control Stations in Nuclear Power Plants, /6.23/

It should be noted that the efforts undertaken by the Licensees in the beyond-design-basis and severe-accident area related to the implementation of SAM Programs since the late 1980s has been on a voluntary basis first. The licensees agreed to implement the respective RSK recommendations. In the context of the now legally required Periodic Safety Reviews (PSR) every ten years the defence in depth and the fundamental safety functions have to be reassessed using current site conditions and impacts conceivable at the plant site. These regular safety reviews address enhanced protection against hazards as well as the implementation of on-site or plant internal preventive and mitigative accident management measures. A PSR guideline specifies a set of beyond-design-basis scenarios to be analysed and covered by the Accident Management Manual.

Extensive documentation of all the measures implemented and especially of the hardware modifications performed in German NPPs both in the preventive and mitigative domain can be found in the reports of the German government to the Convention of Nuclear Safety, e. g. the report of 2005 /6.10/.

The BfS on behalf of the BMU has compiled an overall status report of the implementation of AM-measures as recommended by the RSK and requested by the BMU. Table 6-1 and Table 6-2 show the updated status of implementation of important accident management measures in BWRs and PWRs.

Table 6-1: Implementation of accident management measures in BWRs (4/2011)

Measure	BWR type 69				BWR type 72	
	KKB	KKI 1	KKP 1	KKK	KRB II B	KRB II C
Accident Management Manual	●	●	●	●	●	●
Independent injection system (steam driven turbo-pump)	●	●	●	●	□	□
Additional injection and refilling of the reactor pressure vessel	●	●	●	●	●	●
Assured containment isolation	●	●	●	●	✓	✓
Diverse pressure limitation for the reactor pressure vessel	●	●	●	●	●	●
Filtered containment venting	●	●	●	●	●	●
Containment inertisation by N_2	●	●	●	●	●*	●*
Supply-air filtering for the control room	●	●	●	●	●	●
Emergency power supply from neighbouring plant	□	□	●	□	●	●
Increased capacity of batteries	●	✓	●	●	✓	✓
Restoration of off-site power supply	●	●	●	●	●	●
Additional off-site power supply (underground cable)	●	●	●	●	●	●
Sampling system in the containment	**	●	●	❍	●	●

* wetwell inerted, drywell and wetwell equipped with passive autocatalytic recombiners
✓ design ● realized through back fitting measures ❍ applied for □ not applicable
** proposal in preparation

Table 6-2: Implementation of accident management measures in PWRs (4/2011)

Measure					pre-KONVOI				KONVOI		
	KWB A	GKN I	KWB B	KKU	KKG	KWG	KKP 2	KBR	KKI 2	KKE	GKN II
Accident Management Manual	●	●	●	●	●	●	●	●	●	●	●
Secondary-side bleed	●	●	●	●	●	●	●	●	●	✓	✓
Secondary-side feed	●	●	●	●	●	●	●	●	●	●	●
Primary-side bleed	●	●	●	●	●	●	●	●	●	●	●
Primary-side feed	●	●	●	●	●	●	✓	●	●	✓	✓
Assured containment isolation	●	●	●	●	●	✓	●	●	●	✓	✓
Filtered containment venting	●	●	●	●	●	●	●	●	●	●	●
Passive autocatalytic recombiners to limit hydrogen formation	●	●	●	●	●	●	●	●	●	●	●
Supply-air filtering for the control room	●	●	●	●	●	●	●	●	●	✓	●
Emergency power supply from neighbouring plant	●	●	●	□	□	□	●	□	□	□	●
Sufficient capacity of the batteries	●	●	●	✓	●	✓	●	●	●	●	●
Restoration of off-site power supply	●	●	●	●	●	●	●	●	●	●	✓
Additional off-site power supply (underground cable)	●	●	●	●	●	●	●	●	●	●	●
Sampling system in the containment	❍	●	●	●	●	●	●	●	●	●	●

✓ design ● realized through back fitting measures ❍ applied for □ not applicable

The PWR KWO is shutdown since 2005 and in decommissioning since 2008. Therefore it is not listed in the tables above. The reactor and the spent fuel pool inside the containment are completely unloaded. All remaining 342 fuel assemblies are stored in a spent fuel pool in a separate emergency building, which is protected against external hazards. The requirements for the residual heat removal are not very high. The current residual heat amounts to 165 kW, so that the grace period for accident management measures to cool the spent fuel pool is very long. F. i. 100 OC pool temperature is reached after 12 days and the water level would decrease within 75 days to the top of the fuel assemblies. Passive safety features of the spent fuel pool are the integrity of the pool itself, the safety barriers for retention of radio activity and the prevention of recriticality. Measures to be taken in case of an accident will be defined based on the operating procedures and due to the very long grace periods based on an examination of the status of plant. Predefined written procedures of applicable measures are not needed. The information is separately provided in the relevant chapters (6.1 and 6.4) at the end under the heading KWO.

With respect to accident management and its organisation in NPPs a distinct line is drawn in Germany between the design basis area and the beyond-design-basis area.

Accidents within the design basis area are dealt with by so-called ‘event-oriented procedures’ if the event is clearly identifiable by use of a decision tree. If this is not the case, a set of ”symptom-oriented procedures” is additionally in place. Both sets of procedures are comprised in the Operating Manual (Betriebshandbuch, BHB) /6.12/. BDBAs are dealt with by using the so-called “Notfallhandbuch (NHB)” or (beyond-design-basis) Accident Management Manual/6.13/. The NHB is structured along the same lines as the symptom-oriented part of the operating manual, i.e. it is based on the fundamental safety function concept. The NHB includes preventive (core intact) as well as a few mitigative severe accident management procedures (core damaged). The emphasis is, however, on the prevention side and limited “guidance” is available up to now besides these procedures for the core damage situation. The mitigative procedures describe e.g. how to operate the filtered containment venting system installed as part of the Severe Accident Management Program.

In order to select one of the installed accident management actions in case of an event, a clear set of criteria exists, based on direct measurable physical variables. Basically, precise criteria are available to the shift supervisor as when to enter the symptom-oriented procedures or the NHB. Alert criteria /6.26/ are defined to activate the Emergency Response Organisation respectively the Emergency Response Team, which will take over the responsibility/decision-making in case of a BDBA or severe accident as soon as the team is operable.

The main RSK recommendations on the German “Anlageninterner Notfallschutz” (SAM Program) are still up to date, especially with regard to the basic requirements – implementation of SAM measures based on additional hardware for accidents starting at full-power operation. All these RSK recommendations are as well in general agreement with the respective WENRA requirements mentioned under “LM: Emergency Operating Procedures and Severe Accident Management Guidelines” /6.11/.

Activities to provide the legal basis for the further improvement of the SAM Program by the implementation of SAMG started as early as in 2003. In this process, proposals for improvements of SAM Program requirements related to the current state of the art and IAEA /6.8, 6.9/ and WENRA /6.11/ recommendations have been made.

In 2005 a PSA-Guideline /6.24, 6.25/ was issued. It contains amongst others the requirement to perform a PSA-Level-2, i.e. the analyses of severe accidents considering accident management measures. Since that time German NPPs have performed a plant specific PSA level 2 study which was or is reviewed under the leadership of the local Länder authority.

In 2009/2010, the German RSK started a renewed discussion on the implemented SAM measures in Germany. This resulted in the publication of new and extended recommendations: “Basic recommendations for the planning of emergency control measures by the licensees of nuclear power plants“ /6.6/. Special focus there is on: emergency response organisation, internal and external alert procedure, communica-tion in case of an emergency, technical and organisational matters of emergency organisation, emergency documentation. The information provided on Accident Management measures is very short and similar to the RSK recommendations from 1992 /6.4/. Although neither a recommendation on a systematic implementation neither of SAMG nor on SAM measures for low-power and shutdown states is described there. The implementation of SAMG is still under discussion and its development has been initiated for several German NPPs on the basis of the respective PSA level 2. At GKN-I, it has already been realized. This is in accordance to WENRA reference level LM 2.3.

In chapter 0.4 “RSK safety review and follow up actions” are described in detail. By a BMU letter dated 20 June 2011 the Federal State authorities were asked to initiate further clarifications with their licensees and to further support the work of the RSK. On 19 October BMU asked the Länder authorities on the states of implementation of RSK recommendations. In their responses the Länder authorities reported on achievements and on-going investigations and assessments.

6.1 Organisation and arrangements of the licensee to manage accidents

6.1.1 Organisation of the licensee to manage an accident

The responsibility for accident management lies with the operating organisation (mainly shift personnel) in the short term and with the Emergency Response Organisation after its initiation. Regarding emergency preparedness, the licensee has to build up organisational units and provide technical equipment that ensures the effective co-ordination of Severe Accident Management Measures as well as comprehensive information and support of the external emergency response organisation.

General responsibility for accident management lies with the plant manager (Leiter der Anlage - LdA). The person responsible for the emergency organisation, the preparation and performance of emergency exercises by order of the LdA and for the equipment of the room for the Emergency Response Team and the alternative room as well as for the completeness and operability of this equipment is often the production manager.

In an emergency, the emergency organisation consisting of Emergency Response Team and the deployment units, who are staffed by the normal plant personnel, is put into place.

Staff is immediately called to the plant via special alerting procedures and devices (automatic call system).

An on-call system with main on-call duties and technical on-call duties is in place, which is helpful for fast establishment of the Emergency Response Organisation.

- Staffing and shift management in normal operation

The shift staffing during normal operations always ensures that there is sufficient availability of expert staff to perform the required initial EOPs in the event of an emergency without any external support. The minimum manning of a shift is described in the control room and shift regulations (part of the operating manual /6.12/). In addition, the Accident Management Manual/6.13/ specifies an emergency organisation consisting of an Emergency Response Team and other operational units, which can be notified via an alarm system on short notice. A variety of diverse means of communication are available for this purpose; their function is guaranteed even in case the infrastructure is largely destroyed.

Fire fighting and rescue tasks are normally accomplished by other than shift personal e. g. security service personnel on duty during the shift.

- Measures taken to allow optimum intervention by personnel

As mentioned above KTA 1201 /6.12/ and KTA 1203 /6.13/ require that the emergency response organisation has to be included in the organisation of personnel and in the Accident Management Manual.

In case of a beyond-design-basis event in a nuclear power plant in which the criteria for recommending an early warning or an emergency alert according to the "alarm regulation" of the operating manual are fulfilled, the emergency organisation is put into place. The emergency organisation replaces the regular organisation of personnel for the time of the emergency. In this situation, the proven management structures and responsibilities as well as the functions of the radiation protection officer and the shift supervisor in charge remain unchanged.

The latest RSK recommendation /6.6/ provides more details on the emergency preparedness. The German licensee reports describe the individual realisation of the Emergency Response Organisation.

At German nuclear power plants, the emergency organisation is divided into a planning level and an execution level, consisting of the Emergency Response Team and the deployment units, respectively. An example is provided below.

<u>Emergency Response Team</u>

The Emergency Response Team is a working and decision-making committee that is formed by the management team of the plant. It normally consists of:

<u>Emergency Response Team leader</u>

- plant manager or deputy

<u>Heads of section (or its deputy)</u>

- Operation
- Mechanical
- Electrical
- Radiation Protection

<u>Officers and further managerial staff (in some plants part of the</u> Emergency Response Team)

- Nuclear safety officer
- Central tasks (e. g. communication, staffing, supplies)
- Head of the site security subsection
- PR officer

The central tasks related to the technical control, command and monitoring of the plant in an emergency as well as the staff-related, organisational and administrative measures are also fulfilled by the Emergency Response Team. The Emergency Response

Team comprises all activities that are necessary, suitable and feasible to prevent or limit the consequences of a severe accident for the plant and for the environment.

Deployment units

The deployment units represent the link to the deployment forces on site. They are correspondingly tasked by the Emergency Response Team.

- Use of off-site technical support for accident management

The following institutions, companies etc. are generally available for support and individual contracts have been set-up:

- Emergency Response Team of the utility
- Emergency Response Team of vendor AREVA
- KHG (Kerntechnischer Hilfsdienst GmbH)
- external (regional) disaster control organisation
- public services (police, fire brigade, other emergency services)

Contracts exist further with external firms to provide operating supplies and further heavy machinery.

- Dependence on the functions of other reactors on the same site

KRB II (two BWR type 72): Both units are independent of each other related to design features. As part of AM, a common containment filtered venting system is installed. With the exception of the venting system jointly used by Units B and C, all systems, technical installations (incl. e.g. mobile pump units) and Severe Accident Management Measures as well as all available personnel can be used separately for each unit. Thus the AM system of each unit is nearly independent of the AM system of the neighbouring unit.

In the event of simultaneous core meltdown, filtered containment venting by means of the venting system can sequentially be performed for each unit. The design of the containment and of the joint venting system is such that in sequential venting operation for each unit, containment integrity is permanently ensured. By closing the isolation valves following the successful venting of a unit, consequences for the neighbouring unit can be excluded in the long run, even at sequential venting of both nits.

KKI (PWR and BWR type 69): A PWR and a BWR of type 69 are located on the same site. Both units are fully independent of each other. The BWR on this site is in shutdown since March 2011 (see also chapter 0).

KKP (PWR and BWR type 69): A PWR and a BWR of type 69 are located on the same site. Both units are fully independent of each other. The BWR on this site is in shutdown since March 2011 (see also chapter 0).

KWB (two PWRs): Two PWRs of similar design are located on the same site. Both units are independent of each other. Both PWRs on this site are in shutdown since March 2011 (see also chapter 0).

GKN (two PWR): Two PWRs are located on the same site, one of the new KONVOI type and the other one of the second PWR generation. Both units are independent of each other. The older PWR GKN-I on this site is in shutdown since March 2011 (see also chapter 0).

- Procedures, training and exercises

The training and further qualification program comprises theoretical training measures, practical training programs for individual areas of crisis organisation, and emergency exercises. The content and scope of the program are checked at annual intervals and amended if necessary. The implementation of the program is to meet the following objectives: training (theory), practical exercising of AM measures and identifying weak points in the planning and equipment.

Once a year, an internal, usually unannounced emergency exercise is conducted mostly in the presence of nuclear regulatory representatives and/or authorized experts or other technical specialists.

All exercises are based on scenarios that adequately consider the behaviour of the plant in an emergency. In these exercises, the organisational, staff-related and technical measures and provisions are checked for their operability.

- Plans for strengthening the site organisation for accident management

The results of all exercises are recorded and evaluated, and suggestions for improvements are derived and implemented. They are also presented to the authority. Proposals for improvement, those already implemented and further ones, have not been reported by the licensees.

KWO - Organisation of the licensee to manage an accident:

The organisation and arrangements of the licensee KWO to manage the operation and accidents is adopted to the specific plant status – the operation of a spent fuel pool in the emergency building. General responsibility for the management of accidents lies with the technical plant manager (Technischer Leiter der Anlage - LdA). The technical plant manager is responsible for the safe operation of the unit and decides on the appropriate measures and persons (specific response teams) needed in case of an accident. To alert the persons needed in case of an accident a specific alert criterion have been defined, dependent only on the spent fuel pool water level. Starting from an initiating event typically 50 days are needed to reach pre-alert signalisation and 75 days for alert. Measures to be taken in case of an accident will be defined based on the operating procedures and due to the very long grace periods based on an examination of the status of plant. Predefined written procedures of applicable measures are not needed.

The shift staffing during normal operations always ensures that there is sufficient availability of expert staff to perform the required initial EOPs in the event of an emergency without any external support. The manning of a shift is described in the relevant regulations (part of the operating manual /6.12/). Support is provided by an „on-call duty" (Bereitschaftsdienst) for different disciplines like machinery, electro technics, radiation protection and fire fighting.

The local staff and the technical plant manager decide if support by a special licensee Emergency Response Team is needed.

The training and further qualification program is adapted to the specific plant situation. Once a year, an emergency exercise is conducted.

6.1.2 Possibility to use existing equipment

- Provisions to use mobile devices:

All mobile equipment needed and described in the Accident Management Manual is available at the NPP. The equipment needed is already in place at the locations/in the compartments. To install it, only simple actions are required. How to use the equipment is described in the procedures of the Accident Management Manual.

At all NPPs, various pieces of equipment and heavy machinery are located on site as well, which can be used in case of an accident.

- Provisions for and management of supplies:

There are sufficient supplies of operating and auxiliary materials, especially for fuel stocks needed to operate the diesel generator units.

Agreements/contracts exist with local suppliers to provide fuel and lubricants on a privileged basis within a specified time frame on demand.

Usually there are spare parts available on site to repair individual diesel generator sets.

For more details see chapter 5.1.

- Management of radioactive releases

The main safety functions for limiting radioactive releases are containment isolation and ensuring containment integrity. Especially a filtered containment venting system is installed as part of the AM programs and further described in chapter 6.3.

Radioactive releases are managed according to the specified procedures in the operating manual, especially in line with the alarm regulation and radiation protection regulation as well as with various operating instructions. KTA safety standards /6.14 – 6.19/ provide further details on requirements for the measurement of radioactive releases.

Instructions for the Emergency Response Team regulates i.a. the following: environmental monitoring, calculation of radiation doses from emission data, performance of measures to decontaminate individuals, measures to be taken by the radiation protection personnel and the manning of the assembly points, taking of potassium iodine tablets.

- Communication and information systems

All plants have a very wide spectrum of different means of communication, such as:

  - normal telecommunication via local telephone circuit
  - alternative telecommunication via different local telephone circuits

- mobile phones
- battery-backed and diverse satellite telephones, stationary and mobile
- secured (BOS)-radio and non-secure 2-way-radio
- fax
- e-mail
- remote reactor surveillance (in German Kernreaktor-Fernüberwachung, KFÜ)
- Direct communication line between NPP and external Emergency Preparedness Organisation and Länder authority

KTA 3901 /6.22/ provides further details on requirements related to this topic and its individual realisation (fulfilling the requirements) is described in the licensee reports.

KWO - Possibility to use existing equipment:

Due to the high level of passive safety functions and the very long grace periods the use of external mobile devices is not needed.

There are sufficient supplies of operating and auxiliary materials on site.

Radioactive releases are managed according to the specified procedures in the operating manual, especially in line with the alarm regulation and radiation protection regulation as well as with various operating instructions.

The above mentioned for communication and information systems is as well true.

6.1.3 Evaluation of factors that may impede accident management and respective contingencies

- Extensive destruction of infrastructure or flooding around the installation that hinders access to the site

In the reports provided by the licensees, two different aspects were studied: the feasibility of the AM measures under the mentioned boundary conditions and the equipment provided on site.

The present AM measures have mostly been checked for their feasibility under unfavourable conditions in which events occur simultaneously. In particular, the simultaneous occurrence of an earthquake, flood and station-blackout with other external hazards has been investigated. It was found that some measures are impaired in their feasibility or can no longer be carried out in such a case. Other measures, on the other hand, have been identified as still available. The execution of AM measures is still possible from the Main Control Room or the Emergency Control Room or directly on site. There are several possibilities provided for the Emergency Response Team to relocate if the Emergency Response Room can no longer be used. Food supplies for the Emergency Response Team are usually ensured for several days.

The usual operational hoisting gear (tractors, stackers, fork-lift trucks) is available at different locations within the plant grounds for moving debris or snow masses.

For more information in general concerning the impact of external hazards, see also chapters 2, 3 and 4.

- Loss of communication facilities / systems

Communication paths have already been mentioned in a chapter above. It is not expected that all these different communication paths ways fail at the same time. Therefore at least one way of communication should exist. For example, 2-way-radio, radio broadcasting and sat-phone will still work.

- Impairment of work performance due to high local dose rates, radioactive contamination and destruction of some facilities on site

All NPPs have installed a filtered air supply system for the main control room, based on a RSK recommendation from 1989. Alternative rooms for the Emergency Response Team are available. Off-site emergency facilities are available in case of high contamination on-site. Further recommendations are provided by RSK in 2010 /6.6/ and are defined in KTA 3904 /6.23/.

- Impact on the accessibility and habitability of the main and secondary control rooms, measures to be taken to avoid or manage this situation

Access to the main control room respectively the building or the emergency control room is possible via different ways. This is plant-specific and details are in the licensee reports. See as well answer above for filtered air systems.

- Impact on the different premises used by the Emergency Response Teams or for which access would be necessary for management of the accident

Alternative rooms on site and/or off-site emergency facilities for the Emergency Response Team are available in the vicinity of the plant. This is as well plant-specific and details are in the licensee reports.

- Feasibility and effectiveness of accident management measures under the conditions of external hazards (earthquakes, floods)

All AM measures are feasible as long as the rooms in which switching operations have to be performed are accessible.

See answer to chapter 6.1.3 first topic above.

- Unavailability of power supply

The information provided and the number of measures to be used without power supply differs from plant to plant. Assessments were made on an individual basis. For some units, the failure of battery power has also been taken into account.

PWRs:

Some accident management measures are still available without AC power supply, but depending on the capacity of the batteries, e.g. primary and secondary bleed and feed, restoring of the third grid connection, emergency injection into the demineralized-water storage tanks, and filtered containment venting. Secondary bleed and feed can be used as well without any power (AC and DC).

BWRs:

Some accident management measures are still available without AC power supply, depending on the capacity of the batteries, such as the use of steam-driven injection systems, injection by mobile pumps into the RPV, drywell, wetwell, spent fuel pool, restoring of the third grid connection, filtered containment venting.

- Potential failure of instrumentation

All plants are equipped with instrumentation according to KTA 3502 (Accident and Wide-Range Instrumentation) /6.21/. Here, the instrumentation is defined that is necessary for the identification of the plant status in accidents. Such instrumentation is qualified for (design basis) accidental situations but to some degree is available even beyond. This instrumentation is available directly after recovery of DC power. Indirect information is also used. A containment sampling system was installed in all units as part of accident management provisions, except KWB-A, KKK and KKB where the system was in the licensing or development process.

- Potential effects from the other neighbouring installations at the site, including considerations of restricted availability of trained staff to deal with multi-unit, extended accidents

In case of simultaneous accidents in different units, immediate actions needed for severe accident management can be performed independently in each unit. In any case additional personal from the neighbouring unit is available for NPPs with two units on the site.

Radiation levels have been analysed on the assumption of only one unit undergoing a severe accident.

The impact of destruction of the facilities on site and severe accident situations on the neighbouring unit on accident management has not been analysed so far; c.f. chapter 6.1.1.

KRB II (two BWR type 72): Both units are independent of each other related to design features.

KKI (PWR and BWR type 69): A PWR and a BWR of type 69 are located on the same site. Both units are fully independent of each other. The BWR on this site is in shutdown since March 2011 (see also chapter 0).

KKP (PWR and BWR type 69): A PWR and a BWR of type 69 are located on the same site. Both units are fully independent of each other. The BWR on this site is in shutdown since March 2011 (see also chapter 0).

KWB (two PWRs): Two PWRs of similar design are located on the same site. Both units are independent of each other. Both PWRs on this site are in shutdown since March 2011 (see also chapter 0).

GKN (two PWR): Two PWRs are located on the same site, one of the new KONVOI type and the other one of the second PWR generation. Both units are independent of each other. The older PWR GKN-I on this site is in shutdown since March 2011 (see also chapter 0).

KWO - Evaluation of factors that may impede accident management and respective contingencies:

Factors that may impede the management of accidents are not relevant; as no active measures are needed to deal with accidents in the early phase and long grace periods exist for the preparation of other measures.

Even an extensive destruction of infrastructure or flooding around the installation or limited access to the site has no significant effect as no active measures are needed to deal with accidents in the early phase and long grace periods exist for the preparation of other measures.

6.1.4 Conclusion on the adequacy of organisational issues for accident management

Accident management is at any time capable of taking the plant to a safe or at least controllable condition and keeping it there. The organisation of accident management and therefore the control of accidents are thus adequate in all respects.

KWO:

The organisation adapted to the plan status in relation to the management of accidents is adequate in all respects.

6.1.5 Measures which can be envisaged to enhance accident management capabilities

Recent initiatives contain the establishment of Severe Accident Management Guides (SAMGs) to cover further beyond design basis accident scenarios. The plants in operation have decided to further develop and implement SAMGs in the near future.

KWO:

No further measures are needed.

6.2 Accident management measures in place at the various stages of a scenario of loss of the core cooling function

6.2.1 Before occurrence of fuel damage in the reactor pressure vessel/a number of pressure tubes (including last resorts to prevent fuel damage)

The recommendations for the Accident Management concept and the priority for the preventive measures described in Accident Management Manual by EOPs have been defined already in 1992 by the RSK /6.4/. The realisation was done thereafter by the licensees. More details in general are described in chapter 1 and as an introduction into chapter 6.

PWRs:

Almost all of the **German PWRs** use the following AM measures, which are described in the Accident Management Manual by detailed procedures (EOP):

- Use of operational margins and hardened systems (like volume control system, emergency borating system etc. for injection at high pressure)
- Secondary bleed and feed by feed water system and tank or by a mobile pump
- Primary bleed and feed by installed ECCS systems
- Emergency injection into the demineralized-water reservoirs and spent fuel pool
- Restoration of AC power supply (e.g. third grid connection)
- Restoration of damaged/failed safety systems

In the event of a multiple failure of safety systems, accident management measures serve for taking the plant back to a safe range of operation in order to ensure the fundamental safety functions. They can be divided into measures for prevention and mitigation.

All measures that remove decay heat from the fuel assemblies can be seen as measures preventing fuel assembly damage. Relevant parameters in this context are an available heat sink as well as a sufficient coolant inventory both in the reactor pressure vessel and in the spent fuel pool.

a) Secondary Bleed & Feed

The measure of depressurizing the steam generators and feeding into the depressurized steam generators has to be taken with priority. This is done with the aim to initiate substitute feeding with the feedwater system and the pressurized feedwater tank or a mobile pump if all operational and safety-related systems for steam generator feeding fail. Together with the heat removal via the atmospheric steam-dump station, sufficient cooling is thus ensured, if one of the SGs is fed. The measure is thus designed that no additional water with high boric-acid concentration has to be added to the primary side providing the primary side stays leak tight.

b) Primary Bleed & Feed

To ensure a sufficient coolant inventory in cases with high system pressure, primary system pressure has to be lowered by opening the pressurizer relief valves to such an extent that the emergency cooling systems are enabled to refill the primary system. This AM measures is initiated **only** if the secondary bleed & feed measures is not functional. For water injection HP and LP ECC systems can be used typically with injection of water from storage tanks as well as the containment sump in the long-term. In the short-term and also in the case of total loss of AC-power the water inventory of the accumulators is used. The water inventories provided for this purpose have such a high boric-acid concentration that subcriticality in the core remains ensured.

Both measures a) and b), especially the depressurisation, can be carried out as long as battery supply is available. Secondary bleed and feed can also be carried out in case of loss of all power including batteries.

Given the usable instrumentation and its accident-proof availability, it is safely ensured that even beyond-design-basis events are detected. This is ensured by the requirements of KTA 3502 /6.21/.

As there are on-call and alarm personnel available, sufficient deployment forces can be mobilized at any time, but typically enough personal is on the shift to perform the needed actions. All relevant activities can be carried out from correspondingly shielded rooms, so that their feasibility can be assumed even if dose rates are increased.

BWRs:

In German BWRs, typically the following measures are implemented, described in an accident sequence diagram and the Accident Management Manual by EOPs:

High-pressure injection into the RPV:

- reactivation of the RPV injection pump (feedwater pump)
- enhanced injection via control rod drive pumps
- enhanced injection via seal water pumps

Medium-pressure injection into the RPV:

- use of condensate pump via feed water system and a separate train (cross-connection)

Low-pressure injection into the RPV:

- automatic injection from feedwater tank due to steam pressure
- injection into RPV by primary feed pumps of the heat removal system
- service water injection into the RPV by a special train connecting the essential service water system with the residual heat-removal system
- injection into the RPV by mobile pump systems incl. fire-fighting systems

Containment venting:

- The system for filtered containment venting may also be used as alternative heat sink. The flow of the venting system is designed such that a complete removal of the decay heat of a unit via the venting system at least 10 hours after the reactor has been shut down is possible.

BWR type 72:

For a plant of BWR type 72 more details in general are described in chapter 1. Below an overview is provided. The availability of these measures is continually verified and confirmed in in-service inspections. These measures for risk reduction can be divided into two groups: measures using existing safety margins (reserves) and preventive accident management measures.

Measures using existing safety margins

These also take the safety-related value and use of the operating systems into account and make use of it to enhance safety.

- Cross-connection RM/RL - between the condensate and the feedwater system allows RPV feeding by condensate pumps.
- River water injection - via this installed pipe it is possible to inject water from the River directly into the reactor pressure vessel or, in the event of a LOCA, into the containment.
- Fire-fighting connections - connections have been installed in various locations of the fire-fighting system that allow to feed directly into the condensate storage tank or the reactor pressure vessel.
- Segregation of the high-pressure and the low-pressure train of an emergency core cooling and residual-heat removal system (ECCS & RHRS) - in one train, an additional separate cooling system for the high-pressure pump was installed, so that operation of the high-pressure pump is still possible even without low-pressure pump or booster pump.
- Additional independent residual heat removal and injection system (AHRS) - in order to achieve a decisive improvement of reactor pressure vessel feeding and residual-heat removal from the wetwell in connection with common-cause failures, a fourth redundant system train was installed under diverse/dissimilar aspects. The electrical power supply of the components is designed completely autonomous and in the case of a loss of off-site power is executed via a dedicated diverse emergency diesel generator. The latter is started up by a largely diverse reactor protection system. The AHRS furthermore has its own control panel (for more details see chapter 1).
- Diverse pressure limitation system - three smaller electric-motor-driven valves are installed parallel to the existing electric-motor-driven safety and relief valves, also under diversity aspects; these can be operated both operationally and by the reactor protection system. In case of a complete loss of the electricity supply, the valves will stay in open position.
- Installation of an indirect diverse RPV level measuring system and diverse RPV level signal "level low" - a diverse signal indicating that a low coolant level has been reached in the reactor pressure vessel has been realized. This way, the failure of the RPV level measuring system is controlled by fully independently initiated measures.

Preventive accident management measures

- Filtered venting – the measure serves as an alternate heat sink in case the wetwell cooling is lost and for the prevention of an overpressure failure of the containment by the intentional discharge of medium from the containment atmosphere (wetwell) via a venturi scrubber to the environment. The mechanical components and the ancillary systems were designed to withstand a pressure up to 10 bar.
- Maintaining overpressure of control room ventilation and filtering the supply air - to ensure monitoring of the plant by the control room personnel even during core meltdown accidents.

- 20-kV underground cable connection - The electricity supply of the consumers needed for accident management was ensured by an additional buried cable whose connection is sufficiently physically separated from the main and standby grid connection. This way, the simultaneous supply of any emergency power bus-bar in each unit is possible.

6.2.2 Measures after the occurrence of fuel damage in the reactor pressure vessel/in a number of pressure tubes

PWRs:

Even if core degradation cannot be prevented, the above-mentioned preventive measures are intended to be used, based on the decision of the Emergency Response Team, to provide water injection into the damaged core with the objective to cool the core and to achieve a coolable state. Active flooding of the reactor pit is not intended. Further measures and guidance for the Emergency Response Team will be described in the SAMGs in the near future.

Passive autocatalytic recombiners (PAR) are installed in the containment to keep the hydrogen concentration low to avoid combustions challenging the containment integrity (see chapter 6.3).

If the pressure build-up in the containment is too large, a system for filtered containment venting is installed and will be put into operation (see chapter 6.3).

The accident-proof instrumentation according to KTA 3502 /6.21/ could be used to some extent to determine the current plant status as well as the containment sampling system.

BWR type 72:

Even if core degradation cannot be prevented, the above-mentioned preventive measures are intended to be used, based on the decision of the Emergency Response Team, to provide water injection into the damaged core with the objective to cool the core and to achieve a coolable state.

In addition, the use of the emergency measure "start-up of the boron injection system TW" is possible to prevent recriticality (see chapter 6.3).

Furthermore, for preventing a melt-through of the RPV, there exists the possibility to cool the reactor pressure vessel from outside by flooding the containment. This measure is described in the Accident Management Manual (see chapter 6.3).

Passive autocatalytic recombiners are installed in the containment (drywell and wetwell) to keep the hydrogen concentration low to avoid global combustions challenging the containment integrity. In addition, the wetwell is inerted with nitrogen (see chapter 6.3). The implementation of autocatalytic recombiners in the reactor building is under discussion.

If the pressure build-up in the containment is too large, a system for filtered containment venting is installed (one common system for both units) and will be put into operation (see chapter 6.3).

The accident-proof instrumentation could be used to some extent to determine the current plant status.

BWR type 69:

Even if core degradation cannot be prevented, the above-mentioned preventive measures are intended to be used, based on the decision of the Emergency Response Team, to provide water injection into the damaged core with the objective to cool the core and to achieve a coolable state.

In addition, the use of the emergency measure "start-up of the poison injection system TW" prevents a possible recriticality (see chapter 6.3).

Furthermore, for preventing a melt-through of the RPV there exists in principle the possibility to cool the reactor pressure vessel from outside by flooding the containment. The measure would have been considered further within the framework of SAMG preparation if the plants had continued to be operated (see chapter 6.3).

The containment (drywell and wetwell) is inerted by nitrogen to prevent hydrogen combustion (see chapter 6.3).

If the pressure build-up in the containment is too large, a system for filtered containment venting is installed and will be put into operation (see chapter 6.3).

The accident-proof instrumentation could be used to some extent to determine the current plant status as well as the containment sampling system.

6.2.3 Measures after the failure of the reactor pressure vessel/a number of pressure tubes

PWR:

Studies of PSA level 2 showed that first a dry phase of molten core-concrete interaction (MCCI) in the reactor pit occurs. Due to the erosion of the biological shield, a water ingression into the reactor pit after several hours is probable. Further studies of the coolability of a melt exiting from the barriers will be carried out within the framework of the SAMG.

Autocatalytic recombiners are installed in the containment to keep the hydrogen concentration low to avoid combustions challenging the containment integrity (see chapter 6.3).

If the pressure build-up in the containment is too large, a system for filtered containment venting is installed and will be put into operation (see chapter 6.3).

BWR type 72:

Severe Accident Management Measures for flooding the containment are provided and described in the Accident Management Manual. This way it is possible to keep the mass of molten material that has exited from the core covered. Walls in the control rod drive chamber increase the likelihood of achieving coolability of the melt outside the RPV and stabilizing the molten mass inside the containment.

Autocatalytic recombiners are installed in the containment (drywell and wetwell) to keep the hydrogen concentration low to avoid global combustions challenging the containment integrity. In addition, the wetwell is inerted with nitrogen (see chapter 6.3).

If the pressure build-up in the containment is too large, a system for filtered containment venting is installed (one common system for both units) and will be put into operation (see chapter 6.3).

BWR type 69:

If a failure of the RPV can no longer be stopped, there is the risk – if no further measures are taken – that following the failure of the RPV the core melt will get into direct contact with the outer shell of the containment. This will usually also be followed by containment failure, with the melt then reaching into the liner area of the reactor building. Further measures for preventing containment failure due to melt contact would have been considered further within the framework of SAMG preparation if the plants of the type 69 had continued to be operated.

6.3 Maintaining containment integrity after an occurrence of significant fuel damage (up to core meltdown) in the reactor core

6.3.1 Elimination of fuel damage/meltdown at high-pressure

To prevent a core melt down accident in general and as well under high pressure, all plants are equipped with bleed and feed measures to cool the core and to reduce the pressure well in advance before core melting, based on RSK recommendation from 233rd meeting on 22.06.1988. The implementation of the measures for all plants was done by hardware improvements/modifications.

PWR:

In the emergency concept, the measures for depressurizing and feeding the steam generators (secondary bleed and feed) have priority over the measures for the primary-side bleed and feed.

If the secondary-side measures are not effective, the primary pressure shall be lowered by opening the pressurizer valves such that a fuel meltdown at high pressure is prevented and the emergency cooling systems/accumulators can refill the primary-side and cool the core in the long term.

All accident management procedures including all measures and boundary conditions are described in the Accident Management Manual (cf. Chapter 6.2.1)

BWR type 72:

In case of a very low water level in the RPV, RPV depressurisation is actuated automatically in accordance with the design by two redundant safety and relief valves (SRV), three diverse relief valves (valve actuator, uninterrupted power supply) are opened manually – and isolated in open position – thus the transfer to the low-pressure path is ensured. If required, additionally two SRV valves on each of the two remote shutdown stations, and three SRV valves or three diverse relief valves can be triggered in the control room. Even in the event of a failure of the power supply, the motor-driven diverse relief valves will still remain in open position.

These measures are described in the accident sequence diagram/Accident Management Manual.

Further measures for the subsequent injection at low pressure to control the accident sequence in the long term are described in the Accident Management Manual(cf. Chapter 6.2.1).

BWR type 69:

To prevent fuel element damage at high pressure, there is automatic depressurisation (ADE) via the SRV valves. In addition, the option of manual depressurisation is provided. The pilot valves are supplied via battery-secured busbars. At intact power supply, the diverse relief valves can be opened manually in the control room and will remain in open position at a voltage loss.

These measures are described in the accident sequence diagram/Accident Management Manual.

Further measures for the subsequent injection at low pressure to control the accident sequence in the long term are described in the Accident Management Manual (cf. Chapter 6.2.1).

6.3.2 Management of hydrogen risks inside the containment

To prevent a containment failure by a hydrogen risk, all plants are equipped with either passive autocatalytic recombiners (PARs) based on RSK recommendation /6.5/ or are inerted by N_2 based on RSK recommendation /6.1, 6.2/.

PWR:

A hydrogen release within the containment (especially in the design-basis range) is detected by the active hydrogen monitoring and limitation system, and a further accumulation is limited by circulation (mixing) and recombination.

In addition, passive autocatalytic recombiners (PAR) were retrofitted in the containment as an effective measure to minimize risks in cases involving a release of hydrogen and carbon monoxide (the latter as a consequence of the melt-concrete interaction) in case of a core melt accident.

The passive autocatalytic recombiners recombine the combustible gases; the gas concentration can be limited to such an extent that large-scale combustion which will put the containment integrity at risk is prevented. Combustible gases are reduced until the oxygen has been fully depleted.

The number and arrangement of the recombiners in PWR plants differs slightly due to differences in design.

BWR type 72:

A hydrogen release within the containment is detected by the active hydrogen monitoring and limitation system. Additionally, as a preventive measure, hydrogen can be withdrawn by suction by the combustible gas control system and can be recombined.

– Inertisation of the wetwell

During core meltdown processes, the zirconium of the fuel-rod cladding can react with the steam. An oxidation of the cladding tubes starts, and hydrogen is released. To prevent the risk of explosion, the wetwell is inerted with nitrogen (passive measure). This is possible as the wetwell is sealed hermetically during operation and is not accessible.

– Autocatalytic recombiners in the containment

The hydrogen recombination system consists of a total of 78 autocatalytic recombiners operating passively in different sizes and is installed fixed in the containment including the wetwell. In the case of a beyond-design-basis accident involving hydrogen generation and a release into the containment (i.e. core damage), the system has the task to transform the hydrogen and the atmospheric oxygen into steam. The additionally installed combustible gas control system is classified as non-functional to control beyond-design-basis accidents.

In line with RSK recommendations, the catalytic recombination further reduce the risk of a loss of integrity of the containment due to uncontrolled hydrogen combustion (detonation, deflagration). In the case of a beyond-design-basis accident, the containment forms the decisive retaining barrier against the release of radioactive fission products. During normal operation, the hydrogen recombination system has no retroactive effect on the plant. For the installation of the recombiners, stability during an earthquake has been considered.

The catalytic process in the recombiner starts automatically in reactive hydrogen is detected and oxygen is present. The reaction heat generated during the chemical transformation into water activates a convection flow by which the hydrogen-rich gases from the environment continuously flow to the recombiner. Thus no active components are necessary.

The hydrogen recombination system has to maintain the hydrogen content in the containment below the detonation limit under the atmospheric conditions assumed for a loss-of-coolant accident. Based on calculations of the distribution, the recombiners were installed in all compartment areas. Any efficiency losses in case of a challenge are covered by design margins. To ensure operability, there are regular random laboratory tests of the reactivity of the catalyst material.

As the wetwell is inerted with nitrogen, there is only a small amount of oxygen available in the containment sufficient for the recombination of 350 kg of hydrogen, which is far less than the potential amount of hydrogen produced in the core. The hydrogen generated beyond this amount remains stored in the containment and is, if necessary, released via the filtered containment venting into the environment.

BWR type 69:

The hydrogen concentration in the containment is monitored continuously.

Because of the inertisation with nitrogen, there is not enough oxygen available for combustion in the containment (drywell and wetwell).

Additionally, the hydrogen can be combusted in a controlled manner via the thermal recombiners.

6.3.3 Prevention of containment overpressure

To prevent a containment overpressure failure, all plants are equipped with a filtered containment venting system. The recommendations/requirements have been defined by the RSK already in the late 80th /6.1, 6.3/. Typically the systems are installed inside the reactor building which is designed against earth quakes and some other external events or in the auxiliary building. Specific requirements for an earth quake resistant design of the venting systems have not been defined by RSK.

PWR:

The objective of the emergency measure of filtered containment venting is to limit the pressure build-up in the containment while minimizing the radiological consequences for the environment. In the containment venting path, retention systems (venturi scrubber and metal fibre filters) for aerosols (retention efficiency ≥ 99.99 %) and iodine (retention efficiency for elementary iodine ≥ 99.0 % and for organic iodine ≥ 90 %) are installed. The filter efficiency may vary slightly from plant to plant. For an estimation of the release of radioactive materials from the containment, a system for containment sampling is available. A spontaneous loss of containment integrity and related high activity release (cliff edge effect) can effectively be prevented due to the use of filtered containment venting before failure pressure is reached.

The filtered containment venting is at least designed for the maximum admissible containment pressure. The system is on stand-by. To start the containment venting system, manual actions are required. The motorized valve is arranged such that in case of a loss of voltage, the system can be activated manually. In general, filtered containment venting can also be carried out in case of a failure of the AC power supply. The system is designed such that prolonged or repeated operation is possible.

Containment venting is initiated only after reaching the specified criteria and after instruction by the Emergency Response Team, and, in some plants, in consultation with the disaster control authority.

BWR:

In case of a pressure increase in the containment, the measure "containment spraying" can be initiated according to the accident sequence diagram/Accident Management Manual. For this measure, spray systems are available in the drywell and wetwell in BWR plants which are connected to the low-pressure emergency core cooling and residual-heat removal system.

In BWR plants, a system for containment venting is available as a mitigative measure. Due to the option of containment venting it is possible to limit and to decrease the pressure in the containment by the filtered release from the gas space of the wetwell via specific iodine and aerosol filters. In the containment venting path, retention systems (venturi scrubber and metal fibre filter) for aerosols (retention efficiency ≥99.99 %) and iodine (retention efficiency for elementary iodine ≥ 99.0 % and for organic iodine ≥ 90 %) are installed. The filter efficiency may vary slightly from plant to plant. For an estimation of the release of radioactive materials from the containment, a system for containment sampling is available.

The venting mass flow rate is discharged via pressure-proofed piping to the top of the main stack or separately into the environment of the reactor building, such that an entry of hydrogen into the plant building is prevented.

Containment venting is initiated in consultation with the competent disaster control authority according to the procedure described in the Accident Management Manual.

If after containment venting the overpressure in the containment is increasing again, the measure can be repeated.

6.3.4 Prevention of re-criticality

Findings made in experiments show that due to eutectic interactions of different nuclear materials, the control rods in PWR and BWR plants melt or are destroyed at lower temperatures than fuel rods in the course of an accident. This fact may be of importance during the re-flooding of a partly destroyed core with regard to the expected re-criticality.

PWR:

In addition to effective reactivity reduction by control rods, the reactor can be shut down by the extra borating system.

If required, injection into the primary coolant system is possible via the extra borating system or via the volume control system.

All water inventories of all emergency cooling systems contain borated coolant.

During injection into the reactor system via these systems, the melt or the partly destroyed core comes into contact with borated water. Thus, re-criticality is not to be expected, and even in the unlikely event of a possible re-criticality (in the core), multi-redundant systems are available on the use of which the Emergency Response Team has to decide.

Additional boric acid is stored on site.

BWR:

In addition to effective reactivity reduction by control rods, the reactor can be shut down by the measure “start of the poison injection system”.

After the injection of boron by the poison injection system, the storage tank can be refilled with borated water to ensure further injection. Usually, additional supply of boron is available at the plant.

The convened Emergency Response Team decides on the use of the poison injection system and on measures to be performed as part of accident management. Borating of the injected water of the emergency cooling systems is not provided in the Accident Management Manual.

6.3.5 Prevention of basemat melt-through

PWR:

The time-dependent behaviour of the concrete erosion or the cooling capability is subject to considerable epistemic uncertainties. The postulated concrete erosion due to hot melt is minimized if it is covered with water; thus, injection of water into the reactor cavity (via the reactor coolant system) or into the sump is favourable. For a slow course of accident and for covering of the sump, a coolable configuration is also conceivable.

Analyses show that each delay in the course of an accident has a clear positive effect, regarding the grace periods, on the reactor pressure vessel or on the concrete erosion. If heat removal is re-established early, then further core destruction can be stopped.

In the Guidance for mitigative Severe Accident Management Measures (SAMG) of GKN-I, different measures are described by means of which water for cooling the melt can be injected via different paths. With sufficient cooling it is possible to prevent a melt-through of the basemat. Guidance of this type for mitigative Severe Accident Management Measures (SAMG) is in the planning stage at further plants.

BWR type 72:

With the Severe Accident Management Measures of drywell flooding and spraying it is possible to cool the reactor pressure vessel from the outside by flooding the containment, thus preventing a melt-through of the reactor pressure vessel. With these Severe Accident Management Measures, cooling of the molten mass leaking from the RPV is possible. Walls in the control rod drive chamber increase the probability of re-establishing the coolability of the melt outside the reactor pressure vessel and stabilizing the molten mass within the containment.

BWR type 69:

Due to the specific design of the BWR type 69 containment the basemat is not a part of the containment. The basemat is the floor of the lining room of the reactor building below the containment. A melt attack to the basemat is possible only if the containment

fails by melt attack at a lower position, typically the bottom of the control rod drive room (part of drywell). The connections of the lining room to the lower reactor building floors and rooms nearby are different for each of the BWR type 69 units. Especially KKK varies from the other three units.

The answers provided by the licensees to this topic concentrated on the prevention of the RPV failure. Flooding of the control rod drive room was as well mentioned. In general measures to cool the melt in the reactor building are possible as well. Such measures would have been developed as part of the SAMG, if the plants would continue to operate.

6.3.6 Need for and supply of electrical AC and DC power and compressed air to equipment used for protecting containment integrity

Very early after the Chernobyl accident and at the beginning of the RSK discussion on Accident Management concepts, recommendations for containment isolation have been defined by RSK on its 218th meeting on 17.12.1986 /6.1/.

PWR:

The containment is isolated automatically at the beginning of the accident or isolation is triggered by the loss of supply voltage of the instruments (closed-circuit principle).

Combustible gases are recombined by the passive autocatalytic recombiners (PAR), their concentration can be limited to such an extent that any large-scale combustion, which would put containment integrity at risk, is prevented. An external supply of the passive autocatalytic recombiners (voltage, gas, etc.) is not necessary.

Overpressure protection of the containment is reliably ensured by the emergency measure of "filtered containment venting". Even in case of voltage loss, the accessibility of the buildings where the components are located is ensured. The implementation of the containment venting system differs from plant to plant. The containment and the venturi scrubber or the filters are usually connected via a rupture disk. To burst the rupture disk nitrogen has to be injected. A nitrogen cylinder is stored in situ. The motorized valve in front of the rupture disk can be opened manually. Thus the path from the containment via the venturi scrubber/filter to the stack or into the environment is cleared and inerted, and containment pressure can be kept below failure pressure.

No further supply functions to protect containment integrity are necessary.

BWR:

To ensure containment integrity, no auxiliary media (current, compressed air and others) are necessary. The penetration valves of the feedwater and the main-steam lines are self-medium-operated. The reactor protection system is triggered according to the fail-safe principle. The penetration valves of the auxiliary systems are torque valves with uninterruptible power supply.

BWR type 72:

The hydrogen is reduced passively by the passive autocatalytic recombiners; no electrical or other supply is needed.

Even in case of a battery power supply loss, the containment venting system can still be initiated manually. For this, there are manual valves in an area protected against radiation. If the overpressure of 0.5 bar is reached in front of a rupture diaphragm, this rupture diaphragm will provide the access to the containment venting path by itself.

The convened Emergency Response Team decides on the measures to be performed.

Thus containment integrity is ensured in the long term.

BWR type 69:

In the reports of the plant operators of BWR type 69, the systems for containment isolation are not considered. Since it is known that it has the same function as in BWR type 72, the above description applies to all BWRs.

All containments of this type are inerted and protect the containment against hydrogen deflagration in a passive way.

To prevent containment overpressure failure, a containment venting system is available. Only the power supply of the valves in the air space of the wetwell is needed for containment venting. These have to be opened before battery capacity is exhausted. During containment venting, the scrubbing water capacity in the venturi washer heats up and evaporates continuously. Thus, water has to be refilled, however only after several hours. This may be done manually from a radiation-shielded building area.

The convened Emergency Response Team decides on the measures to be performed.

Thus containment integrity is ensured in the long term.

6.3.7 Measuring and control instrumentation needed for protecting containment integrity

The KTA 3502 /6.21/ standard defines as well the requirements for the containment instrumentation to be available during accidents.

PWR:

According to the Accident Management Manual, monitoring of pressure and temperature for the initiation of filtered containment venting is necessary and available as these parameters represent the initiating criteria for the required emergency procedure.

BWR:

The instrumentation generally provided for accidents are the accident overview measuring systems and the wide-range instrumentation, placed in the control room and the

remote shutdown station, and a system for containment sampling. According to the Accident Management Manual, monitoring of containment pressure is necessary and availably in several redundant trains as this parameter represent the initiating criterion for the required emergency procedure for containment venting.

6.3.8 Capability for severe accident management in case of simultaneous core meltdown/fuel damage accidents in different units at the same site

In case of simultaneous accidents in different units, immediate actions needed for severe accident management can be performed independently at each unit.

KRB II (two BWR type 72): Both units are independent of each other related to design features. As part of AM, a common containment filtered venting system is installed. With the exception of the venting system jointly used by Units B and C, all systems, technical installations (incl. e.g. mobile pump units) and Severe Accident Management Measures as well as all available personnel can be used separately for each unit. Thus the AM of each unit is nearly independent of the AM of the neighbouring unit.

In the event of simultaneous core meltdown, filtered containment venting by means of the venting system can sequentially be performed for each unit. The design of the containment and of the joint venting system is such that in sequential venting operation for each unit, containment integrity is permanently ensured. By closing the isolation valves following the successful venting of a unit, consequences for the neighbouring unit can be excluded in the long run, even at sequential venting of both units.

KKI (PWR and BWR type 69): A PWR and a BWR of type 69 are located on the same site. Both units are fully independent of each other. The BWR on this site is in shutdown since March 2011 (see also chapter 0).

KKP (PWR and BWR type 69): A PWR and a BWR of type 69 are located on the same site. Both units are fully independent of each other. The BWR on this site is in shutdown since March 2011 (see also chapter 0).

KWB (two PWRs): Two PWRs of similar design are located on the same site. Both units are independent of each other. Both PWRs on this site are in shutdown since March 2011 (see also chapter 0).

GKN (two PWR): Two PWRs are located on the same site, one of the new KONVOI type and the other one of the second PWR generation. Both units are independent of each other. The older PWR GKN-I on this site is in shutdown since March 2011 (see also chapter 0).

6.3.9 Conclusion regarding the adequacy of severe accident management systems for the protection of containment integrity

PWR:

The robust containment in combination with the emergency measure „filtered containment venting“ and the “passive autocatalytic recombiners” withstands with a high probability all the assumed accident loadings. The grace periods are very long (4-6 days after core meltdown) due to the large free volume in the containment. Additional measures are not necessary. Further mitigative measures (emergency procedures, which

are applied after failure of the measures described in the Accident Management Manual) have to be considered as part of the respective SAMG draft.

BWR:

All above-mentioned Severe Accident Management Measures, especially inertisation (and PARs for BWR type 72) and containment filtered venting are suitable for ensuring containment integrity in the long term. Further measures are not necessary. SAMG are at the planning stage.

6.3.10 Measures that can be envisaged to enhance capability to maintain containment integrity after an occurrence of severe fuel damage

Since the systems for the management and mitigation of severe accidents have already been implemented in the German NPPs and the corresponding procedures are in place, no further measures for this purpose are intended at the moment. However, the accident management programs are being constantly assessed against the background of the latest knowledge and experience obtained from different international sources. The development and implementation of SAMG has been announced.

6.4 Accident management measures to restrict radioactive releases

6.4.1 Radioactive releases after a loss of containment integrity

PWR:

Due to the robust and conservative design of the containment as well as the measures established for containment protections e.g. filtered venting, no Severe Accident Management Measures for restricting activity releases into the environment after the containment integrity is lost are foreseen in the Accident Management Manual. The loss of integrity of the containment system can be expected only well above of the containment design pressure (order of magnitude: double design pressure). Additionally, a pressure increase is considerably delayed due to the large free volume and the large heat capacity of the structure and the components within the containment; it is also intended to use the containment venting system for pressure decay.

In case of a failure of the containment, there will be a release into the reactor building annulus. In case of limited containment leakages and an intact annulus air extraction system, there will be a filtered release via the stack. In case of a loss-of-coolant accident the annulus air extraction system will be triggered automatically via the safety system, or actuated manually, if required.

The start-up of the filtration system for optional use is an operating process, which is regulated in the operating manual.

The emergency response organisation can lay down further measures appropriate to the situation.

BWR type 72

A spontaneous loss of integrity of the containment and the associated activity release can be prevented effectively by the use of the filtered containment venting system. Further Severe Accident Management Measures for restricting the activity release into the environment are not defined in the operating manual.

BWR type 69

Currently, no Severe Accident Management Measures for restricting activity releases into the environment are regulated in the operating manual. Within the framework of the on-going preparation of the "Severe Accident Management Guidelines" (SAMG), this point will be considered. The ventilation systems of the reactor building can specifically be used for activity retention or minimisation.

6.4.2 Accident management after uncovering of the top of fuel in the spent fuel pool

A description of the special measures for preventing core damage in the spent fuel pool described in the Accident Management Manual is not provided here as it is not asked by the ENSREG report structure. Nevertheless, references to preventive measures were made in numerous Licensees reports. Currently, there are no specific Severe Accident Management Measures described in the Accident Management Manual for the conditions after uncovering of the top of fuel in the spent fuel pool.

- Hydrogen Management

PWR:

The spent fuel pool is located within the containment, thus the above-mentioned measures for the limitation of hydrogen and for the retention of radioactive materials in the containment are effective during postulated failures. To ensure heat removal and subcriticality in the spent fuel pool, there are further Severe Accident Management Measures, which mainly concentrate on coolant injection. Due to the large water capacity in the spent fuel pool, there are considerable grace periods.

If the water level drops in the spent fuel pool, then atmospheric oxygen will be the major available agent for an oxidation reaction, which does not produce any hydrogen. Thus, it can be expected that the hydrogen production in the spent fuel pool is significantly smaller than during a core meltdown accident in the reactor pressure vessel. If the hydrogen production is increased due to water injection into the spent fuel pool, then in the long term the atmospheric oxygen is depleted by the zircon-air reaction and the recombiners, thus the total amount of the hydrogen produced is irrelevant.

BWR type 72 and 69:

The spent fuel pool is located in the reactor building in the upper area under the roof, thus outside/above the containment. To ensure heat removal and subcriticality in the spent fuel pool, there are further Severe Accident Management Measures available, which mainly concentrate on coolant injection. Due to the large water capacity in the storage pool, there are considerable grace periods.

Currently, no specific Severe Accident Management Measures for limiting hydrogen concentration are defined in the Accident Management Manual. The Emergency Response Team has to decide on the use of the ventilation systems available (filtered exhaust air system of the purge air and the filtration system), and on measures to inject water into the spent fuel pool, depending on the situation.

- Providing adequate shielding against radiation

PWR:

The spent fuel pool is located in the containment. The shielding of the fuel elements in the spent fuel pool is ensured by the fact that it is covered with water. The available operational possibilities as well as the Severe Accident Management Measures for pool cooling are sufficient to ensure the covering with water. Regarding an exposure of the core in the spent fuel pool, the expected grace times are very long.

BWR type 72 and 69:

The spent fuel pool is located in the reactor building, in the upper area under the roof, thus, outside/above the containment. The sufficient shielding is ensured by the covering with water of the fuel elements as designed, and by the available Severe Accident Management Measures. Here, manual interventions for injection are also conceivable, as the spent fuel pool is accessible in many cases. The expected grace periods are very long, as i.a. the connecting piping is connected significantly above the fuel assembly top end pieces.

- Restricting releases after severe damage of spent fuel in the spent fuel pools

Up to now it was assumed that due to long grace periods and Severe Accident Management Measures such failures are excluded by established preventive measures.

PWR:

The spent fuel pool is located within the containment. The postulated radionuclide releases from the spent fuel pool are retained by the containment. Due to the placement of the spent fuel pool within the containment, the specifications mentioned in 6.3.2 and 6.3.3 continues to apply.

BWR type 72:

The spent fuel pool is located in the reactor building (Secondary Containment) that is protected against all external hazards. Thus, even in case of severe fuel assembly damage in the spent fuel, pool there is an activity barrier. Activity in the reactor building can be retained by, or discharged via the ventilation system (sub-atmospheric pressure system). The ventilation system can be remote-controlled from the control room. Additional possibilities would be considered by the Emergency Response Team in dependence on the available systems.

BWR type 69:

The spent fuel pool is located in the reactor building, which, in the BWR type 69, is protected against external hazards to different extents. Thus, there is a certain activity bar-

rier even in case of severe fuel assembly damage in the spent fuel pool. The Emergency Response Team has to decide on the use of available ventilation systems (filtered exhaust air system of the purge air and the filtration system) and therefore about the retention of activity, and further measures depending on the situation. The ventilation system can be remote-controlled from the main control room.

- Instrumentation needed to monitor the spent fuel condition and to manage the accident

PWR:

The fill level and temperature measurement of the spent fuel pool is available in the Main Control Room and the Emergency Control Room. In the containment, boiling conditions are furthermore detectable by the pressure and temperature build-up measurements. If fuel assembly damage occurs, this can be detected by the high-dose-rate measuring device in the containment and possibly also by the hydrogen measuring devices.

Furthermore, sampling of the containment atmosphere is possible, by which i.a. a concrete-melt interaction can be shown to be taking place.

A postulated failure of fuel cooling in the spent fuel pool can be detected by the available instrumentation; progressing fuel damage after the loss of cooling can be estimated by different measures, comparable with a postulated failure during power operation.

BWR type 72:

The fill level and temperature measurement of the spent fuel pool is available. There is instrumentation including measured radiological data (control room or remote shutdown station) available by which, even under core meltdown conditions (also after an interim loss of voltage or auxiliary media, also under radiation protection aspects), the plant condition can be identified, providing the necessary information for Severe Accident Management Measures. According to KTA 3502 /6.21/, the entirety of these measurements can be assigned to the accident display equipment.

BWR type 69:

The fill level and temperature measurement of the spent fuel pool is available. Boiling conditions are furthermore detectable by the pressure and temperature build-up in the reactor building. The activity or iodine and noble gas-discharge rates can be measured in the area of the spent fuel pool as well as in the exhaust stack. Based on this information, early indications of a failure or fuel assembly damage in the spent fuel pool are available.

- Availability and habitability of MCR

PWR:

The spent fuel pool is located within the containment. Due to the emergency measure “filtering of the supply in the control room – maintaining overpressure” the control room

can be manned. As the main control room is located in the switchgear building, the concrete shielding of the reactor building protects it against direct radiation.

BWR type 72:

Even in case of a postulated activity release from the spent fuel pool, the unaffected availability of the main control room can be assumed, due to the location within the secured reactor building and the filtered supply air of the control room.

BWR type 69:

Due to the emergency measure “filtering of the supply in the control room” during activity releases, the main control room can still be manned. As the control room is located neither in the same building nor on the same level as the spent fuel pool, further impacts on the availability of the main control room in consequence of an accident in the spent fuel pool can be excluded.

6.4.3 Conclusion on the adequacy of measures to restrict radioactive releases

PWR:

The spent fuel pool is located within the containment. The leak tightness of the containment is ensured reliably due to the containment isolation triggered by the reactor protection system. A pressure build-up can effectively be prevented by the provided emergency measure “filtered containment venting”. The accumulating hydrogen concentrations are minimized early by the PAR. Thus the measures to restrict radioactive release are adequate.

In the operating manual and in the Accident Management Manual, many measures are identified which can minimize the postulated release into the environment if the systems are available.

Within the framework of the development of the manual for mitigative Severe Accident Management Measures (SAMG), scenarios with activity releases into the environment were evaluated for the GKN-I plant. The derived strategies are in principle also applicable to the other PWR plants of the utility (GKN-II, KKP 2) and other German PWRs as these SAMGs are known to the vendor (AREVA) Emergency Response Team and each licensee has a contract with the vendor for support in case of an emergency.

BWR type 72:

As described above, there are many possibilities (within the framework of design and beyond-design Severe Accident Management Measures) to ensure the cooling of the fuel assemblies. These measures are adequate and suitable to prevent the uncovery of the fuel assemblies. Thus, an activity release from the spent fuel pool can be reliably prevented.

BWR type 69:

Due to the robust design of the plants and a very good suitability of the diverse and preventive Accident Management Measures, a significant activity release is practically

excluded, or the extent of a significant activity release can effectively be minimized. No further measures are necessary.

KWO - Accident management measures to restrict radioactive releases:

The spent fuel pool is located in the emergency building. The shielding of the fuel elements in the spent fuel pool is ensured by the fact that it is covered with water. Shielding is further provided by the thick concrete walls of the spent fuel pool and the building itself. The available operational possibilities for pool cooling are sufficient to ensure the covering with water. The requirements for the residual heat removal are not very high. The current residual heat amounts to 165 kW, so that the grace period for accident management measures to cool the spent fuel pool is very longer. F. i. 100°C pool temperature is reached after 12 days and the water level would decrease within 75 days to the top of the fuel assemblies.

As no active measures are needed to deal with accidents in the early phase and long grace periods exist for the preparation of other measures, situations as described under chapter 6.4 are not expected. The design of the spent fuel pool within the emergency building is very robust (see chapters 2 – 4).

Even in case of massive fuel assembly damages in the spent fuel pool and large leakages from the emergency building analyses showed that the ICRP and SSK radiation protection limits for the public near the plant are not exceeded.

The instrumentation needed to monitor the spent fuel pool conditions and the radioactive releases are designed for accident conditions. Mobile device are easy to be installed.

The control room needed to monitor the spent fuel pool status and to perform actions is accessible under the conditions described.

6.5 Assessment and conclusions of the regulator

6.5.1 Status of the documents presented by the licensees

The documents that are the basis for the assessment, especially the implemented Accident Management concepts and the emergency manuals have been classified by the licensees according to their degree of approval in the regulatory process. The Länder authorities in general confirm the appropriateness of the classification. Differing classifications that occurred in some cases have no influence on the overall validity of the assessments.

6.5.2 Assessment of the regulator

The Länder authorities confirm that the reports of the licensees essentially conform to the ENSREG requirements. However, due to the tight schedule of the stress test quantitative assessments of safety margins were not always feasible.

The Länder authorities basically confirm the information and assessments provided by the licensees.

The estimation of factors, which may limit the Accident Management provisions require additional analyses by an appropriate systematics.

The realisation of the recommendations of the RSK related to Accident Management as a result of the RSK safety review (see chapter 0.4) has priority.

Further, the systematic implementation of SAMG in the operating NPPs is foreseen. An example of successful SAMG implementation is given by GKN-I.

Additional statement of Länder authority of Baden-Württemberg: Additional preventive and mitigative procedures and guidelines for full power and low power shut down states as well as the cooling of the spent fuel pool are to be developed.

KWO:

Sufficient information in different detail has been provided by the Licensee in its report in relation to the relevant main paragraphs according to the EU-(ENSREG) specification, especially: “Organisation and arrangements of the licensee to manage accidents” and “Accident management measures to restrict radioactive releases”. The latter one covers the existing procedures for the prevention of the building failure and the limitation of radioactive releases from the spent fuel pool.

The Länder authority basically confirms the information and assessments provided by the licensee.

6.5.3 Conclusions (in view of improvements)

The existing procedures for the continual review of the accident management measures within the framework of nuclear regulatory supervision have proved effective. This review considers on principle the latest developments (e.g. Information Notices issued by GRS, Recommendations made by the RSK and the SSK) as well as lessons learned from emergency exercises.

In 2010, the German Reactor Safety Commission (RSK) started a renewed discussion on the implemented severe accident management measures in Germany. This resulted in the publication of new and extended recommendations: “Basic recommendations for the planning of emergency control measures by the licensees of nuclear power plants” from 14th October 2010 /6.6/. These recommendations shall be realized in all NPPs in short time.

In their statement “Plant-specific safety review (RSK-SÜ) of German nuclear power plants in the light of the events in Fukushima-1 (Japan)” from 15th May 2011 the Reactor Safety Commission (RSK) gave the following provisional insights from the accident in Japan concerning further measures and reassessments of the severe accident management program, amongst others:

- assuring the effectiveness of accident management measures even under aggravated boundary conditions caused by external hazards
- assuring the effectiveness of accident management measures at SBO

- review of the accident management concept with regard to injection possibilities for the cooling of fuel assemblies and for ensuring subcriticality
- increased consideration of the wet storage of fuel assemblies in the accident management concept
- identification of safety margins still available in the beyond-design-basis range and the application of corresponding procedures based on the implementation of SAMG
- and for each point important aspects are taken into account.

The realisation of the above mentioned recommendations of the RSK related to Accident Management as a result of the RSK safety review (see chapter 0.4) has priority.

Further, the systematic implementation of SAMG in the operating NPPs is foreseen. An example of successful SAMG implementation is given by GKN-I.

The extension and revision of the Accident Management concepts for NPPs which does not continue the power operation shall be performed.

Under the assignment of BMU the GRS is working to prepare an information notice. In there the implementation of some of the recommendations based on the accident in Fukushima to German NPPs shall be elaborated.

KWO:

The procedure of the external flooding of the spent fuel pool “after uncovering top of the fuel” will be treated further in the oversight process.

References

/6.1/ Überprüfung der Sicherheit der Kernkraftwerke mit Leichtwasserreaktor in der Bundesrepublik Deutschland, Ergebnisprotokoll der 218. RSK-Sitzung am 17.12.1986 und der 222. RSK-Sitzung vom 24.06.1987

/6.2/ Abschlussbericht über die Ergebnisse der Sicherheitsüberprüfung der Kernkraftwerke in der Bundesrepublik Deutschland durch die RSK, Ergebnisprotokoll der 238. RSK-Sitzung am 23.11.1988

/6.3/ Spezifikationen für Filtersysteme in den Druckentlastungsstrecken des Sicherheitsbehälters von Druckwasserreaktoren und Siedewasserreaktoren, Stellungnahme der RSK, 263. Sitzung am 24.06.1991

/6.4/ Behandlung auslegungsüberschreitender Ereignisabläufe für die in der Bundesrepublik Deutschland betriebenen Kernkraftwerke mit Druckwasserreaktoren, Positionspapier der RSK zum anlageninternen Notfallschutz im Verhältnis zum anlagenexternen Katastrophenschutz, Ergebnisprotokoll der 273. RSK-Sitzung am 09.12.1992

/6.5/ Maßnahmen zur Risikominderung bei Freisetzung von Wasserstoff in den Sicherheitsbehälter von bestehenden Kernkraftwerken mit Druckwasserreaktor nach auslegungsüberschreitenden Ereignissen, Ergebnisprotokoll der 314. RSK-Sitzung am 17.12.1997

/6.6/ Basic recommendations for the planning of emergency control measures by the licensees of nuclear power plants; Recommendation of SSK and RSK, issued in the 242th Meeting of SSK on 01./02. July 2010, authorized in the 244th Meeting of SSK on 03. November 2010, issued in the 429th Meeting of RSK on 14. Oktober 2010

/6.7/ Gesellschaft für Reaktorsicherheit, (GRS) mbH, German Risk Study on Nuclear Power Plants, Phase B, GRS-A-1600, 1989

/6.8/ IAEA Safety Standard, Safety Guide NS-G-2.15, Severe Accident Management Programmes for Nuclear Power Plants, Vienna, 2009

/6.9/ IAEA Safety Standards, Safety of Nuclear Power Plants: Design, Draft Safety Requirements No. SSR 2/1, DS414 Revision of Safety Standards Series No. NS-R-1, March 2011

/6.10/ Convention on Nuclear Safety, Report by the Government of the Federal Republic of Germany for the third Review Meeting in April 2005

/6.11/ Western European Nuclear Regulators' Association Reactor Harmonisation Working Group, WENRA Reactor Safety Reference Levels, January 2008

/6.12/ KTA 1201, Requirements for the Operating Manual, Safety Standards of the Nuclear Safety Standards Commission (KTA), issued 2009-11

/6.13/ KTA 1203, Requirements for the Accident Management Manual, Safety Standards of the Nuclear Safety Standards Commission (KTA), issued 2009-11

/6.14/ KTA 1501, Stationary System for Monitoring the Local Dose Rate within Nuclear Power Plants, Safety Standards of the Nuclear Safety Standards Commission (KTA), issued 2010-11

/6.15/ KTA 1502, Monitoring Radioactivity in the Inner Atmosphere of Nuclear Power Plants, Safety Standards of the Nuclear Safety Standards Commission (KTA), issued 11/05

/6.16/ KTA 1503.1, Monitoring the Discharge of Gaseous and Aerosol-bound Radioactive Substances; Part 1: Monitoring the Stack Discharge of Radioactive Substances During Specified Normal Operation, Safety Standards of the Nuclear Safety Standards Commission (KTA), issued 6/02, reaffirmed 11/07

/6.17/ KTA 1503.2, Monitoring the Discharge of Gaseous and Aerosol-bound Radioactive Substances; Part 2: Monitoring the Stack Discharge of Radioactive Substances During Design Basis Accidents, Safety Standards of the Nuclear Safety Standards Commission (KTA), issued 6/99, reaffirmed 11/04

/6.18/ KTA 1503.3, Monitoring the Discharge of Gaseous and Aerosol-bound Radioactive Substances; Part 3: Monitoring the Non-stack Discharge of Radioactive Substances, Safety Standards of the Nuclear Safety Standards Commission (KTA), issued 6/99, reaffirmed 11/04

/6.19/ KTA 1504, Monitoring and Assessing of the Discharge of Radioactive Substances in Liquid Effluents, Safety Standards of the Nuclear Safety Standards Commission (KTA), issued 11/07

/6.20/ KTA 1508, Instrumentation for Determining the Dispersion of Radioactive Substances in the Atmosphere, Safety Standards of the Nuclear Safety Standards Commission (KTA), issued 2006-11, reaffirmed 11/11

/6.21/ KTA 3502, Accident Measuring Systems, Safety Standards of the Nuclear Safety Standards Commission (KTA), issued 6/99, reaffirmed 11/04

/6.22/ KTA 3901, Communication Means for Nuclear Power Plants, Safety Standards of the Nuclear Safety Standards Commission (KTA), issued 11/04

/6.23/ KTA 3904, Control Room, Remote Shutdown Station and Local Control Stations in Nuclear Power Plants, Safety Standards of the Nuclear Safety Standards Commission (KTA), issued 11/07

/6.24/ Bundesamt für Strahlenschutz, Methoden zur probabilistischen Sicherheitsanalyse für Kernkraftwerke, August 2005, BfS-SCHR-37/05, ISSN 0937-4469, ISBN 3-86509-414-7

/6.25/ Bundesamt für Strahlenschutz, Daten zur probabilistischen Sicherheitsanalyse für Kernkraftwerke, August 2005, BfS-SCHR-38/05, ISSN 0937-4469, ISBN 3-86509-415-5

/6.26/ RSK/SSK-Recommendation, Criteria for alerting civil protection authorities through operators of nuclear facilities, September/October 2003, BAnz 2004 Nr. 89

/6.27/ Bund-Länderausschusses für Atomkernenergie, Rahmenempfehlungen für den Katastrophenschutz in der Umgebung kerntechnischer Anlagen vom 27.10.2008, GMBl. 2088, Nr 62/63, Seite 1278

/6.28/ KTA-GS-66, Nuclear Safety Standard Commission, Positional Report, Compilation of Plant-internal Accident Management Measures and Correspondence Check with KTA Safety Standards, Salzgitter, June, 1996

7 General Conclusion

7.1 Key provisions enhancing robustness (already implemented)

As a licensing prerequisite, precautionary measures against damage as necessary according to the state of science and technology have to be taken as stipulated in Sec. 7 of the Atomic Energy Act. The safety concept includes the safe management of all initiating events, which are conceivable to take place due to the operation of the facility, taking as design basis accidents. Engineered safety features are reviewed by the licensing authority to ensure that all design basis accidents can be coped with. This basic design concept, with its principles of redundancy, diversity, physical separation of redundant sub-systems and safety-oriented system behaviour in the event that subsystems or parts of the plant malfunction, ensures that the safety systems necessary to provide the fundamental safety functions remain available. By this concept, the defence in depth levels 1 to 3 and 4 are covered. The particularly consistent application of the mentioned principles in German nuclear power plants contributes substantially to the robustness of the nuclear power plants in Germany.

The German NPPs are designed to withstand earthquakes with exceedance probabilities of 10^{-5}/a (median) as required by nuclear safety standard KTA 2201.1. The seismic hazard has to be determined by deterministic and probabilistic site specific assessments. The DBEs derived from these assessments for the German nuclear power plants imply macroseismic intensities at the sites in the range between I_0 (European Macroseismic Scale (EMS) = VI (minimum design requirement) and I_0(EMS) = VIII. The implementation of the regulatory requirements has been reviewed every ten years within the Safety Reviews as stipulated by the Atomic Energy Act. For beyond design basis earthquakes no detailed assessments are available. The licensees reported substantial seismic safety margins and indicated considerable robustness. The Länder authorities confirmed the information and assessments of the licensees regarding the licensing basis. The assessments of safety margins were stated as being plausible.

The same is valid for flooding hazards. Whereas the design basis has been verified in the normal regulatory process, safety margins were quantitatively presented and/but not assessed for all sites. The protection against flood events with exceedance probabilities of 10^{-4}/a (according to the nuclear safety standard KTA 2207) was reported by the licensees and could be confirmed by the Länder authorities in line with the normal regulatory quality standards. The approach for the identification of safety margins was generally confirmed or stated as being plausible (for those plants without quantitative assessment).

In contrast to the design against earthquakes and flooding that is based on specific nuclear safety standards, the design against other meteorological hazards such as wind and snow loads relies on conventional civil engineering standards. These standards typically refer to more frequent events with exceedance probabilities of one in 50 years. For even rarer meteorological events the licensees report that these are covered by the safety precautions implemented in the design against earthquakes, aircraft crashes, and explosions (for which specific nuclear safety standards are available).

The safety precautions against loss of electrical power are specified in nuclear safety standards KTA 3701, 3702, 3703 and 3704. Two off-site grid connections, a design of n+ 2 redundancies (4x50% or 3x100%) for the emergency power supply backed up by

additional emergency power diesel generators and battery support for at least 2 hours are required. The implemented design features as reported by the licensees indicate considerable robustness against loss of off-site power. The design was confirmed by the Länder authorities in line with the normal regulatory quality standards. The additional identified safety margins for increased robustness again based on plausible arguments. The Länder authorities confirm for the most parts, that because of the robust design with all measures taken in the concept of defence in depth the possibilities for additional measures to further increase the robustness are limited.

For the safety precautions against loss of ultimate heat sink, the situation regarding the design of the component cooling systems (CCS) and essential service water systems (ESWS) in the German nuclear power plants differs from site to site. The regulations principally demand an n+2 redundant design for active components of the safety relevant (essential) service water systems. The implemented precautionary measures within the design were confirmed by the Länder authorities in line with the normal regulatory quality standards. The defence of the plants against the loss of ultimate heat sink and possible consequences is confirmed. The additional identified safety margins for increased robustness again based on plausible arguments. The Länder authorities confirm for the most parts, that because of the robust design with all measures taken in the concept of defence in depth the possibilities for additional measures to further increase the robustness are limited.

Beside the robust and sophisticated design of German NPPs also Severe Accident Management features are implemented in all plants based on the related RSK Recommendation of 1989. Severe Accident Management in Germany is focused on the use of preventive measures. For identification of accident conditions diverse measuring systems for RPV-Level and other measurements are installed. For PWRs the available accident management measures are mainly primary and secondary feed and bleed with multiple ways for coolant injection and the use of hardened systems. For BWRs multiple systems for coolant injection are implemented as well as diverse systems for depressurization of the reactor pressure vessel. In the area of mitigative measures for protecting the containment integrity the Severe Accident Management Program concentrates on the use of passive autocatalytic recombiners and filtered containment venting in PWRs and BWRs as well as inertization by nitrogen in BWRs. To ensure the habitability of the Main Control Room under all circumstances the measure “filtering of the supply air in the control room – maintaining overpressure” is realized in all NPPs. All German NPPs do have an Emergency Control Room to safely shut down the reactor. All accident management measures, preventive and mitigative, as well as additional possibilities for the use of operational systems are detailed described in the symptom-based accident management manual. Accident management manuals for treatment of beyond design basis accidents have been introduced in all NPPs. The Länder authorities confirm the information and assessments provided by the licensees. The estimation of factors, which may limit the Accident Management provisions require additional analyses.

For all topics dealt with above, the statements of the competent Länder authorities also identified in detail technical issues for individual plants, where additional investigations or further improvements are under way and part of the ongoing regulatory oversight procedure. Nevertheless, substantial safety margins and robustness were stated for all plants. Besides the robustness already implemented in the design of the nuclear power plants, the implemented measures for severe accident management provide further safety margins to protect the public and the environment.

7.2 Safety Issues

The German licensees reported no shortfalls regarding safety precautions for the nuclear power plants participating in the EU stress tests. Likewise, no cliff edge effects were detected. The German regulatory body confirms this finding as far as the licensing basis and the basic safety design is concerned. Nevertheless, the results documented in the Chapters 2 to 6 in the report reflect the view of the regulatory body, that further improvement of the safety remains an important obligation for the licensees based on operation experience and further safety insights, and constitutes as well a constant issue for the competent authorities in their respective roles and functions in the regulatory oversight process.

7.3 Potential safety improvements and further work forecasted

According to the German Atomic Energy Act, the holder of the licence of the nuclear installation is responsible for nuclear safety. The licensees continuously review measures for improving the safety of their nuclear power plants, also taking into account the continuously advancing knowledge after Fukushima and the current regulatory processes.

These reviews and the resulting improvement measures of the plant operators are subject to the supervision by the competent licensing and supervisory authorities of the *Länder*, which base their regulatory decisions, among others, on reports and expert opinions of the independent expert organisations..

The plant-specific investigations, which were the basis for the RSK safety review, will be further developed and completed as appropriate. The licensing and supervisory authorities of the *Länder* will consider plant specific findings and related operation experience in their regulatory decisions as well as potential safety improvements following the review processes at the federal level.

Notwithstanding the robust design of the nuclear power plants based on a defence in depth concept of 4 levels, the BMU performs further work related to the lessons learned from the Fukushima accident. In particular this is essential to the already ongoing regulatory programme:

- Continuation of the RSK work programme related in particular to the following topics:
    - Station blackout
    - Loss of offsite power
    - Loss of service water supply
    - Accident management measures
    - Aircraft crash

- The results of in-depth analyses and assessments, to be performed by GRS in the next three years and other upcoming actions to further address the regulatory implications of the Fukushima Dai-ichi NPP accident

- A GRS information notice containing an analysis of the events in Fukushima for potential applicability of individual aspects to German plants, which will be checked in accordance with the practice agreed upon with the Länder

- The update of the higher-level nuclear rules and regulations of the BMU. The earlier draft of these nuclear rules and regulations is currently being revised in light of the new findings and assessments after the events in Fukushima. Following the consultations of the RSK and with the licensing and supervisory authorities of the *Länder*, these new "Safety Requirements for Nuclear Power Plants" are expected to be published in 2012.

- Ongoing updates of the safety standards of the Nuclear Safety Standards Commission (KTA)

Furthermore, the regulatory authorities require the operators of nuclear power plants in Germany to perform safety retrofits and improvements. In 2010, BMU in cooperation with the *Länder* compiled a preliminary and non exhaustive list of retrofit measures. In the light of Fukushima and the results of the EU stress test this list has to be updated and discussed with the Länder. The safety requirements and measures described have been developed based on findings from the regular safety reviews, the supervisory procedures, national and international operating experiences, national and international development of rules and regulations, and on results from a variety of safety analyses and research activities. This list is being continued and updated with consideration of the findings from further analyses regarding the reactor accidents in Fukushima. Implementation of the indentified safety improvements will be dealt within the regulatory licensing and oversight process.